NEW PRODUCTS

Kastas Sealing Technologies

KASTAŞ

All information contained in our catalogue is released only for general usage and not valid for special applications. Given parameters such as maximum pressure, temperature, sliding speed, surface contact pressure and media are determined in laboratory conditions.

In case the operating parameters are requested at maximum level, these values may not be achieved.

Design-based system failures arising from our customers do not relate to Kastas Sealing Technologies. In no event will Kastas Sealing Technologies be liable for any loss, damage, claim or expense directly or indirectly due to such defects. For the best recommendation for a specific application you can contact our sales department.

Kastas Sealing Technologies reserves the right to make all changes and modifications.
Reproduction of this catalogue or any part is strictly forbidden.

KASTAŞ

Hydraulic and Pneumatic Seals

NEW PRODUCTS TECHNICAL CATALOG

CONTENT

INTRODUCTION 3
PRODUCT RANGE 5
TECHNICAL INFORMATION
Elastomers 8
Thermoplastics 9
Thermoplastic Elastomers 9
Material Characteristics 9
Storage of Sealing Elements 10
General Installation Information 10
Units, Quantities and General Tolerances 11
YENİ ÜRÜNLER
K39 - Rod Seal 14
K44 - Piston Seal 16
K46 - Compact Set 18
K48 - Piston Seal 20
K49 - Piston Seal 22
K61 - Pneumatic Compact Seal 24
K64 - Pneumatic Rod Seal 26
K65 - Pneumatic Piston Seal 28
K76 - Spiral Guide 30
K78 - Piston Rod Guide Ring 32
K85 - Static Seal 34
K86 - Static Seal 36
K87 - Fluid Connector Seal 38
K94 - Wiper 40
K98 - Piston Rod Seal 42
K101 - External Wiper 44
K103 - Double Wiper 46
K106 - Pneumatic Wiper 48
K130 - Pneumatic Rod Seal 50
K501 - Piston Seal 52
K504 - Compact Piston Seal 54
K505 - Piston Seal 56
K518 - Compact Piston Seal 58
K704 - Rod Seal 62
K705 - Wiper 64
K706 - Wiper 66
K709 - Rod Seal 68
K715 - Pneumatic Rod Seal 70
K716 - Wiper 72
K755 - Piston Seal 74
K761 - Pneumatic Piston Seal 76
K762 - Piston Seal 78

KASTAŞ

YOUR PRODUCTIVITY PARTNER

Ever since the establishment of our company in 1981, the demand for our extensive range of products has steadily increased as the international market recognized the quality of our products as well as our customer service. The developments are continued with confidence and self-sacrifice keeping the indispensable principles. Fast, reliable, effective solutions are offered with high quality of products to our customers. Continuous innovations are carried through our production, in order to keep up with the globally increasing demand.

ALWAYS THE BETTER…

We value the human being, respect the environment and create differences by combining our technical knowledge with technology. We fulfill the customer expectations in means of "Business and Solution Partner" mentality. With the professional solutions and Quality Management Systems, we are becoming a global brand.

SUCCESS PROGRESS…

We provide first-class, high performance, reliable, proven standard programme and tailor-made sealing solutions for our customers worldwide. Our products are designed and produced by the latest modern manufacturing technologies with in-house compounds;

- Cylinder tests carried out during product development stage
- Highly experienced application engineers
- Compound development in our laboratory

Our commitment, know how and technical infrastructure enable us to provide quick and cost effective solutions based on your individual needs and requirements.

KASTAŞ

QUALITY AND SERVICE…

We have strengthened our company principles with quality control mechanisms that we have built up. We were certified with ISO 16949 Quality Certification in 2007.

- All the activities are managed effectively with process approach in order to achieve corporate targets
- For us, continuous improvement is not a word it's our company philosophy
- We understand the exact needs of our customers and personnel in order to maintain the continuity of customer satisfaction
- We create the necessary environment for our employees to use their capabilities in accordance with corporate targets
- We create common objectives and work in harmony with our suppliers in order to develop their competency

Quality is being perceived as a life philosophy and controlled periodically in order for system continuity.

WORLD INDUSTRY TRUST ON KASTAŞ…

We are pleased to share our long years of experience gained in manufacturing hydraulic and pneumatic sealing elements to fulfill the expectations of our customers with utmost care. We are proud of being among the largest recognized companies in our field.

We have established Kastas Sealing Technologies Europe GmbH in Hamburg, Germany in the beginning of 2009 to be closer to our customers located in North and Western Europe. We are much closer to our customers in Europe now…

KASTAŞ

PRODUCT RANGE

KASTAS CODE	PRODUCT NAME	DRAWING	APPLICATION	MATERIAL	CODE	PRESSURE (max) bar	TEMPERATURE (max) oC	SLIDING SPEED (max) - m/sn	PAGE
K39	Rod Seal		Rod	NBR FABRIC NBR	NB8001 FB8001	250	-30/+105	0.5	14
K44	Piston Seal		Piston	PU POM	PU9201 PM9901	400	-30/+100	0.5	16
K46	Compact Set		Piston	PU POM NBR	PU9201 PM9901 NB7001	400	-30/+100	0.5	18
K48	Piston Seal		Piston	NBR TPE POM	NB8001 TP5501 PM9901	700	-30/+105	0.3	20
K49	Piston Seal		Piston	PU NBR	PU6001 NB8001	400	-30/+100	0.5	22
K61	Pneumatic Compact Seal		Piston	NBR NBR POM AL	NB8001 NB7001 PM9901 AL9901	12	-30/+105	1.0	24
K64	Pneumatic Rod Seal		Rod	PU	PU9201	16	-30/+80	1.0	26
K65	Pneumatic Piston Seal		Piston	NBR	NB7001	12	-30/+105	1.0	28
K76	Spiral Guide		Piston Rod	POLYES-TER PHENOLIC	PH6502		-40/+120	1.0	30
K78	Piston Rod Guide Ring		Piston Rod	PHENOLIC ARAMID	PH6504		-40/+200	5.0	32
K85	Static Seal			PU	PU9401	500	-35/+110		34
K86	Static Seal			PU	PU9201	500	-40/+100		36
K87	Fluid Connector Seal			NBR	NB8501	400	-30/+105		38
K94	Wiper		Rod	PU	PU9401		-35/+110	1.0	40
K98	Piston Rod Seal		Piston Rod	PU NBR	PU9201 NB7001	400	-30/+100	0.5	42
K101	External Wiper		Piston	PU	PU9201		-40/+100	1.0	44

PRODUCT RANGE

KASTAS CODE	PRODUCT NAME	DRAWING	APPLICATION	MATERIAL	CODE	PRESSURE (max) bar	TEMPERATURE (max) oC	SLIDING SPEED (max) - m/sn	PAGE
K103	Double Wiper		Rod	PU	PU9201		-40/+100	1.0	46
K106	Pneumatic Wiper		Rod	NBR	NB8001	12	-30/+105	1.0	48
K130	Pneumatic Rod Seal		Rod	NBR	NB8001	12	-30/+105	1.0	50
K501	Piston Seal	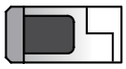	Piston	PA NBR	PA9904 NB7001	500	-30/+105	1.0	52
K504	Compact Piston Seal		Piston	NBR FABRIC NBR POM	NB8001 FB8001 PM9901	500	-30/+105	0.5	54
K505	Piston Seal		Piston	NBR FABRIC NBR POM	NB8001 FB8001 PM9901	500	-30/+105	0.5	56
K518	Compact Piston Seal		Piston	NBR TPE POM	NB8001 TP7301 PM9905	400	-30/+105	0.5	58
K704	Rod Seal		Rod	PTFE NBR	PT6003 NB8001	400	-30/+105	5.0	62
K705	Wiper		Rod	PTFE NBR	PT6003 NB7001		-30/+105	5.0	64
K706	Wiper		Rod	PTFE NBR	PT6003 NB7001		-30/+105	5.0	66
K709	Rod Seal		Rod	PTFE NBR	PT6003 NB7001	400	-30/+105	5.0	68
K715	Pneumatic Rod Seal		Rod	PTFE NBR	PT6005 NB7001	40	-30/+105	5.0	70
K716	Wiper		Rod	PTFE NBR	PT6003 NB7001		-30/+105	5.0	72
K755	Piston Seal		Rod	PTFE NBR	PT6003 NB8001	400	-30/+105	5.0	74
K761	Pneumatic Piston Seal		Piston	PTFE NBR	PT6005 NB7001	40	-30/+105	5.0	76
K762	Piston Seal		Piston	PTFE NBR	PT6003 NB8001	400	-30/+105	5.0	78

TECHNICAL INFORMATION

HISTORY OF RUBBER

The first type of the rubber used in the world is the natural rubber and it is obtained from the resin by crosswise cutting of the rubber tree. Commercial usage of the natural rubber started in 1736 with moving from South America to France. During the early applications in England, it was seen that the natural rubber was able to erase the lead pencil and this material was named as "rubber" in the meaning of rubbing.

Charles Goodyear managed to vulcanize rubber and sulphur. The First World War proved that rubber was a strategic compound and increasing needs caused the invention of synthetic rubber obtained from the derivatives of petroleum.

ELASTOMERS

NITRILE-BUTADIENE RUBBER (NBR)

It is been recommended for the most part of the sealing elements applications and it has a very common use. Nitrile (NBR) is a Butadiene-Acrylo Nitrile (ACN) polymer. At Kastaş the percentage of Acrylo nitrile in the nitrile compound varies between 30% and 50%. The variation in the percentage of ACN changes the volume, gas permeability, elasticity and compression set of the compound used in mineral oils, grease and fuel. Nitrile is very durable against aliphatic hydrocarbons (i.e. propane, butane, petroleum, etc), mineral oils (lubricants, H, HL, HLP type of hydraulic oils), greases, HFA, HFB, HFC, vegetal-animal oils, light heating oil and diesel oil. For fuels and industrial fluids, different mixtures are prepared. Our standard nitrile compound is recommended to be used between 30°C, +105°C. For short period of time, it can be increased to +120 °C. With special additives to increase the lowest temperature resistance the nitrile compound can be used up to -40°C. The compression set of nitrile rubber is very good so it is been widely used as sealing elements.

HYDROGENATED NITRILE-BUTADIENE RUBBER (HNBR)

It is a kind of elastomer which is made in a way that a part or the complete part of NBR polymer is hydrogenised with double linked Butadiene. Vulcanized with peroxide, HNBR has durability against high temperature and oxidation. Having higher temperature resistance and mechanical properties than standard NBR compound, HNBR is recommended to be used between -30°C and 150°C. It has wide range of use especially in automotive sector and special applications in mobile hydraulics.

SILICONE (MVQ)

Silicone keeps its elasticity between -60°C and 200°C. It is not recommended to be used in dynamic applications. It has good resistance to ozone, air and grease. With special additives to increase the lowest temperature resistance MVQ compound can be used up to -90°C. It has less durability against oxidizing lubricants, some hipoits and lubricants of E.P. type.

FLUOROELASTOMER (FKM)

This material under the trademark Viton or Florel has less durability against all types of greases, lubricants and solvents. It has very good resistance against many chemicals. It gives good results in vacuum systems due to the low gas permeability. Mechanical properties and the temperature range can be improved with special additives. It has very low resistance to steam, hot water, methanol and other polar solvents. FKM can be used between -30°C and 225°C.

POLYCHLOROPRENE (CR)

This material under the trademark Neoprene has good resistance to rupture, tear and wearing out between the temperatures -45°C and 100°C. It has durability to flame. Its resistance against mineral oils with high aniline point, silicone oil, greases and alcohol is good. It is also being used in applications where durability for lubricants and atmospheric conditions are required.

POLYURETHANE (PU)

It is widely used in the sealing elements due to the improvements on the compression set property over the last 15 years. It has perfect durability against rupture, tear and wearing out between the temperatures -30°C and 100°C. Its resistance to mineral oils, grease and aliphatic hydrocarbon is good. Its resistance to polar solvents, aromatics, brake fluids, acid and alkaline is not very good. Especially, it is used as a shaft stripper and high pressurized sealing element.

ETHYLENE-PROPYLENE DIENE RUBBER (EPDM)

It can be used between the temperatures -40°C and 145°C.
It has very good resistance to brake fluids, esther based lubricants, hot water and steam.

STYRENE BUTADIEN RUBBER (SBR)

Between the temperatures -50°C and 100°C, its resistance against glycol based brake fluids, inorganic/organic acids and alcohol is good.

NATURAL RUBBER (NR)

It is used between the temperatures -60°C and 100°C. It is recommended in applications where high flexibility is required.

THERMOPLASTICS

POLYTETRAFLUOROETHYLENE-PTFE

This material is known as Teflon, the trademark of DUPONT Company. PTFE material does have the lowest coefficient of friction. Due to the low friction coefficient and high wear resistance, it performs well on poorly lubricating conditions as well as high sliding speeds. PTFE can be used in temperatures between -200˚C to +260˚C. It has very good resistance to all chemicals except alkaline metals, high pressure-temperature chlorotriflour and basic flourines. Hardness and elasticity make the material to be used widely in hydraulic applications. Depending onto the application; glass, graphite, carbon, MoS_2 and bronze filled PTFE can be used to increase mechanical and physical properties. The influence of the hydraulic media, the behavior in contact with the counter surface and the form stability depending on the operating temperature are the important properties when selecting the PTFE compound among the others.

POLYAMIDE-PA

This material is known as Nylon 6. It can be used in temperatures between -30°C to +120°C, for short period of applications this can be increased up to +140°C. Polyamide is able to work on poorly lubricating conditions and does have high wear resistance. It is commonly used as guiding elements in hydraulic and pneumatic systems. Special additives can increase the mechanical and physical properties of the material depending on the application.

POLYOXYMETHYLENE - POLYACETAL (POM)

It has excellent form stability between temperatures -40°C to +100°C, for short period of applications this can be increase up to +140°C. It is commonly used as guide and backup rings in hydraulic and pneumatic systems. It is being safely used in mineral oils, HFA and HFB type of oils. For the guide ring, glass filled POM is used due to its high contact pressure value.

THERMOPLASTIC ELASTOMERS

THERMOPLASTIC POLYESTER ELASTOMER (TPE)

Polyester Elastomers are widely used as backup ring and header ring material with the sealing elements in hydraulic and pneumatic systems due to their chemical structure. It has excellent resistance to hydraulic oils and has high extrusion resistance compared to the other materials. It can be used in temperatures between -40°C to 120°C.

CHARACTERISTIC PROPERTIES OF RUBBER MATERIALS

Physical Properties	NBR	HNBR	FKM	MVQ	EPDM	CR	SBR	NR	PU	PTFE	TPE	POM
TENSILE STRENGTH	3	2	4	6	4	3	1	1	1	5	5	5
ELONGATION AT BREAK	2	2	3	4	3	2	1	1	1	5	5	5
FLEXIBILITY	2	2	4	3	3	3	1	1	2	5	5	5
WEAR RESISTANCE	2	2	4	5	3	2	2	2	1	1	1	1
TEAR RESISTANCE	3	2	3	6	3	2	2	2	1	1	1	1
AGING RESISTANCE	3	2	1	1	1	2	3	3	2	1	3	3
OZONE RESISTANCE	3	3	1	1	1	2	4	4	2	1	3	3
FUEL RESISTANCE	1	1	1	5	5	2	6	6	6	1	2	2
GREASE&HYDRAULIC OIL RESISTANCE	1	1	1	3	4	3	6	6	1	1	1	1
ACID RESISTANCE	4	4	1	5	1	2	3	3	6	1	4	4
ALKALI RESISTANCE	3	3	1	5	2	2	3	3	6	1	4	4
HOT WATER RESISTANCE	3	3	4	5	2	3	3	3	3	1	3	3
MAX. OPERATING TEMPERATURE	105	150	225	200	145	100	100	100	100	260	120	110
MIN. OPERATING TEMPERATURE	-30	-30	-30	-60	-40	-45	-50	-60	-30	-200	-40	-40

1 Excellent **2** Very good **3** Good **4** Medium **5** Low **6** Poor

STORAGE OF SEALING ELEMENTS

The mechanical and physical properties of sealing elements produced from elastomers, thermoplastics and thermoplastic elastomers can change. This could be caused by many factors such as;

- Oxygen
- Ozone
- Direct sun light
- High temperature
- Ultra-violet rays
- Humidity
- Dirt and chemical effects

The sealing elements produced from elastomers, thermoplastics and thermoplastic elastomers do not change any mechanical or physical properties if not exposed to the above mentioned conditions.

ENVIRONMENT, HUMIDITY AND TEMPERATURE

The ideal storage temperature should be between 5°C to 25°C with a humidity of 60%. Lower temperatures do not affect the mechanical properties but before installation we recommend to have the temperature for sealing element to be 20-25°C. In addition to these, direct heat source contacts should be avoided.

DIRT

It may change the mechanical properties of the products. Therefore, the environment should be cleaned before installation and during storage.

LIGHT AND ULTRAVIOLET RAYS

It is recommended to have the storage rooms protected from Fluorescent lamp, ultraviolet rays, powerful light sources and direct sun light. Red or orange colour lights should be preferred.

OXYGEN AND OZONE

These two elements are oxidizing agents. It is recommended to store the seals in the packages that are produced from Polyethylene (PE) material. Ozone is especially a destructive agent so there should not be electrical equipments with high voltages such as motors, etc.

DEFORMATION

Deformation should be avoided during storage. Sealing elements produced from elastomers, thermoplastics and thermoplastic elastomers should be kept away from coercive forces and squeezing as these might cause changes in the mechanical and physical properties of the products.

GREASES AND CONTACT WITH THE HYDRAULIC FLUID

Any contact with solvents, oils and other fluids should be avoided during the storage of the products.

CONTACT WITH METALS

Some metals (e.g. Manganese, Copper) may harm some sealing elements; therefore, contacting directly with metals or their alloys should be avoided.

GENERAL INSTALLATION INFORMATION

Installation information is one of the important factors for hydraulic and pneumatic sealing elements to have a long life span and work without any problem. The installation information that is given in each product page and other general information can be summarized as;

- Installation area and the table should be clean. There should not be any foreign substances.
- Before installation the complete system must be cleaned to remove machining residues, chips, dirt and other particles. Sharp edges must be de-burred or chamfered or radiused.
- To prevent damage to the sealing elements when mounting, cylinder bores, piston rods must be chamfered
- The sealing elements should be cleaned prior to the installation
- All the sealing elements should be oiled with system oil before installation. Using grease should be avoided or a grease type that does not go into the reaction with the sealing element should be chosen.
- Sharp-edged installation tools should not be used.
- It is very dangerous to have uncontrolled heating of sealing elements prior to the installation
- If there is an operation (i.e. painting) after the testing of the cylinder we recommend the temperature not to go above 70°C.

For the installation of hydraulic sealing elements please see section; Hydraulic Sealing Elements - General Installation Information.
For the installation of pneumatic sealing elements please see section; Pneumatic Sealing Elements - General Installation Information.

FURTHER OFFICIAL DERIVED UNITS IN MECHANICS

QUANTITY	UNITS	OFFICIAL UNITS ALSO USED
Angular momentum	N . m . s	
Torque	Nm	
Revolutions per minute	2 . x . rad / s	s^{-1}
Modulus of elasticity	Pa	N / mm^2, bar
Enthalpy	J	Kj
Specific enthalpy	J / kg	kJ / kg
Entropy	J / K	kJ / K
Specific entropy	J / kg . K	kJ / kg . K
Geometrical moment of inertia	m^4	cm^4
Force	N	kN, MN
Gas constant	J / kg . K	kJ / kg . K
Calorific value	J / kg, J / m^3	kJ / kg, kJ / m^3
Momentum	N . s	
Mass moment of inertia	kg . m	g . m, t . m^2
Moment	N . m	
Unit conductance	W / m . K^4	
Volume specific	m^3 / kg	
Coefficient of heat transfer	W / m . K	
Heat capacity	J / K	kJ / K
Heat capacity specific	J / kg . K	kJ / kg . K
Thermal conductivity	W / m . K	
Section modulus	m^3	cm^3

CONVERSION TABLE

FORCE 1 Newton (N) = 1 kg m/s^2			
	N	kp	dyn
1 N	1	0.102	10^5
1 kp	9.81	1	$9.81x10^5$
1 dyn	10^{-5}	$1.02x10^{-6}$	1

ENERGY, WORK, AMOUNT OF HEAT Nm = 1 Joule (J) = 1 Ws				
	Nm	kWh	kpm	cal
1 Nm	1	$0.278x10^{-6}$	0.102	0.238
1 kWh	$3.6x10^6$	1	$0.367x10^6$	$0.86x10^6$
1 kpm	9.81	$2.72x10^{-6}$	1	2.335
1 cal	4.19	$1.17x10^{-6}$	0.428	1

POWER 1 Watt (W) = 1 Nm/s = 1 J/s			
	W	kW	PS
1 W	1	10^{-3}	$1.36x10^{-3}$
1 kW	10^3	1	1.36
1 PS	736	0.736	1

PRESSURE MECHANICAL STRESS 1 Pascal (Pa) = 1 N/m^2 : 1 Mpa (106 Pa) = 1 N/mm^2 = 0.102 kp/mm^2							
	Pa	MPa	bar	kp / cm^2	mm Hg	atm	mWs
1 Pa=1 N/m^2	1	10^{-6}	10^{-5}	$1.02x10^{-5}$	$7.50x10^{-3}$	$9.87x10^{-6}$	$1.02x10^{-4}$
1 Mpa=1 N/mm^2	10^6	1	10	10.2	$7.50x10^3$	9.87	102
1 bar	10^5	0.10	1	1.02	750	0.987	10.2
1 kp/cm^2 (at)	$9.81x10^4$	$9.81x10^{-2}$	0.981	1	736	0.968	10
1 mm Hg (Torr)	133	$1.33x10^{-4}$	$1.33x10^{-3}$	$1.36x10^{-3}$	1	$1.32x10^{-3}$	$1.36x10^{-2}$
1 atm	$1.013x10^5$	0.1013	1.013	1.033	760	1	10.33
1 mWs	$9.81x10^3$	$9.81x10^{-3}$	$9.81x10^{-2}$	0.1	73.6	$9.68x10^{-2}$	1

TOLERANCES FOR MACHINED PARTS OF THERMOPLASTICS

NOMINAL DIMENSION		TOLERANCES ACCORDING TO DIN 7168 "MEDIUM"	RESTRICTED WORKING TOLERANCES
	≤ 6	±0.1	0.10
6<	≤30	±0.2	0.15
30<	≤65	±0.3	0.20
65<	≤120	±0.3	0.30
120<	≤200	±0.5	0.40

Extract from DIN 7168.

TOLERANCES FOR ELASTOMERS

NOMINAL DIMENSION		CLASS M1		CLASS M2		CLASS M3		CLASS M4	
		F	C	F	C	F	C	F	C
Permissible deviations of dimensions in mm.									
	≤ 6.3	±0.10	±0.10	±0.15	±0.20	±0.25	±0.40	±0.50	±0.50
6.3<	≤10	±0.10	±0.15	±0.20	±0.20	±0.30	±0.50	±0.70	±0.70
10<	≤16	±0.15	±0.20	±0.20	±0.25	±0.40	±0.60	±0.80	±0.80
16<	≤25	±0.20	±0.20	±0.25	±0.35	±0.50	±0.80	±1.00	±1.00
25<	≤40	±0.20	±0.25	±0.35	±0.40	±0.60	±1.00	±1.30	±1.30
40<	≤63	±0.25	±0.35	±0.40	±0.50	±0.80	±1.30	±1.60	±1.60
63<	≤100	±0.35	±0.40	±0.50	±0.70	±1.00	±1.60	±2.00	±2.00
100<	≤160	±0.40	±0.50	±0.70	±0.80	±1.30	±2.00	±2.50	±2.50
Permissible deviations in %.									
160<		0.30		0.50		0.80		1.50	1.50

Extract from ISO 3302-1.

NEW PRODUCTS

K39 ROD SEAL

K39 is a single acting rod seal which consists of reinforced cotton fabric and nitrile rubber vulcanized together forming an integral sealing element.

PRODUCT ADVANTAGES
- Functions evenwith poor surfaces
- Reinforced cotton fabric base prevents the seal from extrusion
- Good sealing at low pressures

APPLICATION
Mobile hydraulics and Standard cylinders

MALZEME		KODU
NBR	80 SHORE A	NB8001
COTTON FABRIC NBR		FB8001

OPERATING CONDITIONS			
MEDIA	Mineral oils (DIN 51524)	HFA and HFB	HFC
TEMPERATURE	-30°C +105°C	+5°C +60°C	-20°C +50°C
PRESSURE	≤250 Bar	≤250 Bar	≤250 Bar
SPEED	≤0.5 m/sn	≤0.5 m/sn	≤0.5 m/sn

Note: The above data are maximum values and cannot be used at the same time.

SURFACE ROUGHNESS		Ra	Rmax
Sliding Surface	Ød	≤0.4 µm	≤3.2 µm
Groove Base	ØD	≤1.6 µm	≤10 µm
Groove Flanks	B	≤3.2 µm	≤16 µm

Note: It is recommended to have 50% to 90% of the working surface material contact area value.

INSTALLATION
K39 is to be assembled into open grooves if rod diameter is less than 40 mm. It is very important that the assembly tools must be of soft material and have no sharp edges. Before installation the sealing elements must be oiled with system oil.

NOTES
The permissible sealing gap values of K39 rod seal is given in the below table.

PERMISSIBLE SEALING GAP	
Pressure (Bar)	**Smax (mm)**
150	0.2
250	0.1

Note: The largest sealing gap value occuring on the non-pressurized side of the seal does have a vital importance for the function of the seal and in this respect it is quite important to use the S value lower than the above indicated numbers.

K39 ROD SEAL

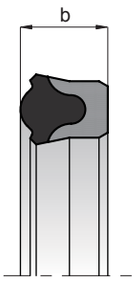

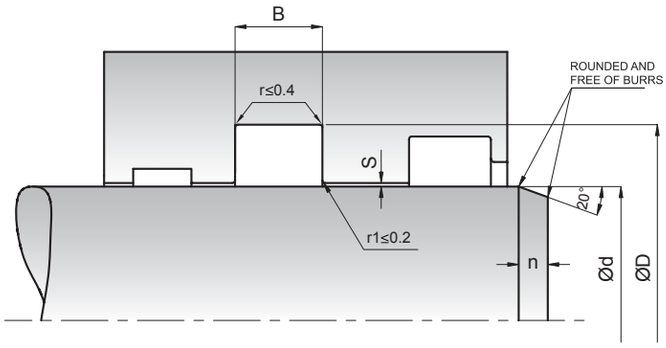

KASTAŞ NO	d(f8)	D(H9)	B(-0/+0.2)	n
K39-020	20	28	6.3	2.5
K39-025	25	33	6.3	2.5
K39-028	28	36	6.3	2.5
K39-030	30	38	6.3	2.5
K39-030/2	30	38	8.5	3
K39-030/1	30	42	9	3
K39-035	35	43	6.3	3
K39-040	40	48	6.3	3
K39-045	45	55	8	3
K39-050	50	60	8	3
K39-055	55	65	8	4
K39-060	60	70	8	4
K39-065	65	77	9.5	4
K39-070	70	82	9.5	4

Please contact our customer service for the dimensions out of our stock list.

K44 PISTON SEAL

K44 is a three piece single acting sealing set which consist of one main sealing component, one thermoplastic back-up ring and one POM piston ring.

PRODUCT ADVANTAGES
- One piece open groove piston design
- Superior static and dynamic sealing
- Back-up ring prevents problems caused by sealing gap
- High abrasion resistance

APPLICATION
Standard cylinders.

MATERIAL	CODE
PU	PU9201
POM	PM9901

OPERATING CONDITIONS			
MEDIA	Mineral oils (DIN 51524)	HFA and HFB	HFC
TEMPERATURE	-30°C +100°C	+5°C +50°C	-20°C +50°C
PRESSURE	≤400 Bar	≤400 Bar	≤400 Bar
SPEED	≤0.5 m/sn	≤0.5 m/sn	≤0.5 m/sn

Note: The above data are maximum values and cannot be used at the same time.

SURFACE ROUGHNESS		Ra	Rmax
Sliding Surface	Ød	≤0.4 µm	≤3.2 µm
Groove Base	ØD	≤1.6 µm	≤10 µm
Groove Flanks	B	≤4 µm	≤16 µm

INSTALLATION
K44 Piston Seal assemblies and operates in open grooves with its own POM piston ring. It is very important that the assembly tools must be soft material and have no sharp edges. POM segments not to strech much while assembling.

NOTES
Easily assembled into one-piece piston by hand. Open groove design gives advantage for easy machining and reduce the machining cost.

K44 PISTON SEAL

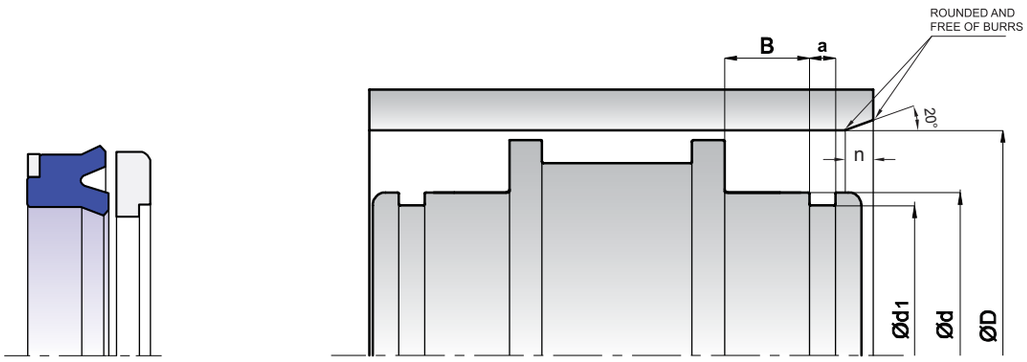

KASTAŞ NO	D (H11)	d(f9)	d1(f8)	a (-0/+0.2)	B(-0/+0.2)	n
K44-110	110	90	85.2	3.5	15	6
K44-125	125	105	100.2	3.5	15	6

Please contact our customer service for the dimensions out of our stock list.

K46 is a four piece doble acting compact seal consisting of polyurethane sealing ring with NBR energizer O-ring and two special profile guide rings made of thermoplastic to absorb transverse forces.

PRODUCT ADVANTAGES
• Superior sealing performance
• No requirement for an additional guide ring due to the compact design
• Economic sealing and guiding solution
• Simple groove design, one-piece piston possible
• Reducing piston machining cost due to low cross-section thickness
• Easy installation

APPLICATION
Agricultural machinery, industrial applications.

MATERIAL		CODE
PU	92 SHORE A	PU9201
POM		PM9901
NBR	70 SHORE A	NB7001

OPERATING CONDITIONS			
MEDIA	Mineral oils (DIN 51524)	HFA and HFB	HFC
TEMPERATURE	-30°C +100°C	+5°C +50°C	-20°C +50°C
PRESSURE	≤400 Bar	≤400 Bar	≤400 Bar
SPEED	≤0.5 m/sn	≤0.5 m/sn	≤0.5 m/sn

Not: The above data are maximum values and cannot be used at the same time.

SURFACE ROUGNESS		Ra	Rmax
Sliding Surface	Ød	≤0.4 µm	≤3.2 µm
Groove Base	ØD	≤1.6 µm	≤6.3 µm
Groove Flanks	B	≤3.2 µm	≤16 µm

Not: It is recommended to have 50% to 90% of the working surface material contact area value.

INSTALLATION
Easily assembled into one-piece piston because the back-up rings and guide rings are been produced in split forms. It is very important that the assembly tools must be of soft material and have no sharp edges. Before installation the sealing element must be oiled with system oil.

K46 COMPACT SET

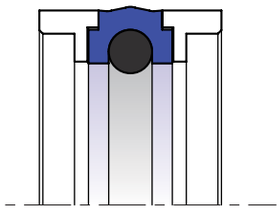

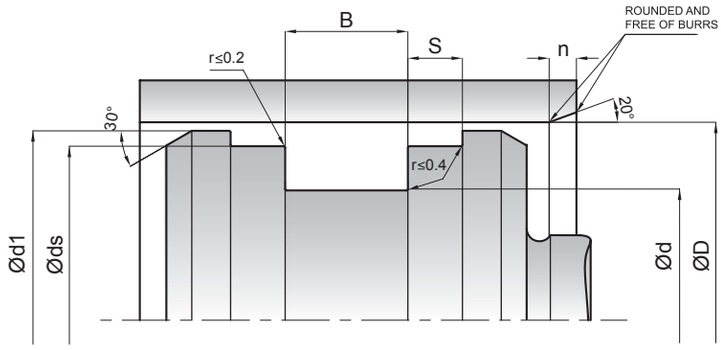

KASTAŞ NO	D(H10)	d(h9)	B(-0.0/+0.2)	ds(h8)	d1(±0.1)	S(-0.0/+0.2)	n
K46 025-017	25	17	10	22	24	4	4
K46 032-024	32	24	10	29	31	4	4
K46 040-030/1	40	30	10	36.5	39	5	4
K46 040-030	40	30	11	35.5	39	4	4
K46 050-040	50	40	11	45.5	49	4	4
K46 063-053	63	53	11	58.5	61.5	4	4
K46 070-060	70	60	12.5	67	69	4	4.5
K46 080-070	80	70	11	75.5	78.5	4	4.5
K46 080-070/1	80	70	12.5	77	79	4	4.5
K46 090-080	90	80	12.5	86	88.5	5	4.5
K46 100-087	100	87	14	93.8	98.5	6	5
K46 100-090	100	90	12.5	96	98.5	5	5
K46 038.10-028.57	38.1	28.575	11.2	33.68	37.36	3.54	5
K46 050.80-041.27	50.8	41.275	11.1	46.25	49.4	3.86	5
K46 063.50-053.97	63.5	53.97	11.2	58.93	62.1	3.86	5
K46 076.20-066.66	76.2	66.66	11.2	71.625	74.8	3.86	5
K46 088.90-076.15	88.9	76.15	14.47	82.93	87.5	5.43	5
K46 101.60-088.90	101.6	88.9	14.47	95.63	99.9	5.43	7

Please contact our customer service for the dimensions out of our stock list.

K48 is a four piece double acting heavy duty piston seal which consists of one TPE profile ring, one elastomeric nitrile rubber to pre load sealing element and two thermoplastic back-up rings.

PRODUCT ADVANTAGES
- Simple groove design
- Superior performance in high and variable pressure
- Long service life
- Very good sealing performance at shock pressures
- High resistance to abrasion
- Ultimate resistance in water based f luids.

APPLICATION
- Mining industry
- Heavy duty applications

MATERIAL		CODE
NBR	80 SHORE A	NB8001
POM		PM9901
TPE		TP5501

OPERATING CONDITIONS		
MEDIA	Mineral oils (DIN 51524)	HFA and HFB
TEMPERATURE	-30°C +105°C	+5°C +60°C
PRESSURE	≤700 Bar	≤700 Bar
SPEED	≤0.3 m/sn	≤0.3 m/sn

Note: The above data are maximum values and cannot be used at the same time.

SURFACE ROUGHNESS		Ra	Rmax
Sliding Surface	Ød	≤0.4 µm	≤3.2 µm
Groove Base	ØD	≤1.6 µm	≤10 µm
Groove Flanks	B	≤3.2 µm	≤16 µm

Note: It is recommended to have 50% to 90% of the working surface material contact area value.

INSTALLATION
Easily assembled into one-piece piston because the back-up rings are been produced in split forms. It is very important that the assembly tools must be of soft material and have no sharp edges. Before installation the sealing element must be oiled with system oil.

NOTES
It is recommended to choose suitable material and quantity for guiding element regarding the purpose of application.

PERMISSIBLE SEALING GAP

Pressure (Bar)	Smax (mm)
P≤350	0.45
350<P≤700	0.25

Note: The largest sealing gap value occurring on the non-pressurized side of the seal does have a vital importance for the function of the seal and in this respect it is quite important to use the S value lower than the above indicated numbers.

K48 with back-up ring

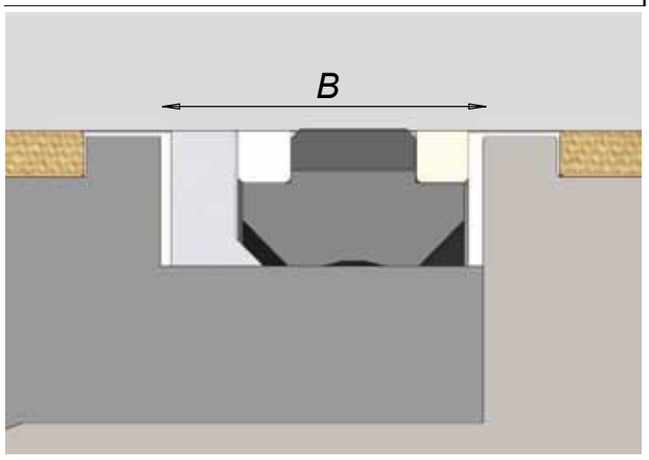

If a back up ring is used in unpressurized side, the seal could resist up to 1500 bar static pressure.

*Note: Please add "**a**" to B dimension.*

ØD	a
≤200	4 mm
>200	5 mm

K48 PISTON SEAL

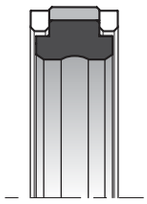

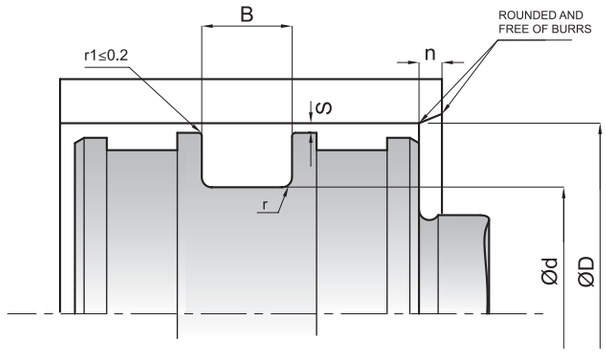

KASTAŞ NO	D(H10)	d(h9)	B(+0.2/-0.0)	r	n
K48-63-50	63	50	14.5	0.2	8
K48-80-66	80	66	17	0.2	8
K48-90-75	90	75	13.5	0.2	8
K48-100-82	100	82	22.5	0.4	10
K48-100-85	100	85	13.5	0.2	8
K48-110-95	110	95	16	0.2	8
K48-120-105	120	105	16	0.2	8
K48-125-110	125	110	15.8	0.2	8
K48-130-105	130	105	30	0.8	14
K48-140-123	140	123	16	0.4	10
K48-140-125	140	125	16	0.2	8
K48-160-145	160	145	16	0.2	8
K48-165-145	165	145	20	0.4	12
K48-180-160	180	160	16	0.2	12
K48-186-166	186	166	16	0.2	12
K48-200-180	200	180	20	0.4	12
K48 250-225	250	225	25	0.8	14

Please contact our customer service for the dimensions out of our stock list.

K49 is a two piece double acting sealing set which consists of a special design polyurethane seal ring and a NBR elastomer ring as energizer.

PRODUCT ADVANTAGES
- Superior static and dynamic sealing
- Ability to move without vibration even at low running speeds
- No twisting in the house due to rectangular profile
- Standardized housing according to ISO 7425-1
- Easy installation
- Low axial housing heights

APPLICATION
- Construction machinery
- Agricultural machinery
- Injection molding machines
- General industrial applications

MATERIAL		CODE
PU	60 SHORE D	PU6001
NBR	80 SHORE A	NB8001

OPERATING CONDITIONS			
MEDIA	Mineral oils (DIN 51524)	HFA and HFB	HFC
TEMPERATURE	-30°C +100°C	+5°C +50°C	-20°C +50°C
PRESSURE	≤400 Bar	≤400 Bar	≤400 Bar
SPEED	≤0.5 m/sn	≤0.5 m/sn	≤0.5 m/sn

Not: The above data are maximum values and connot be used at the same time.

SURFACE ROUGHNESS		Ra	Rmax
Sliding Surface	Ød	≤0.4 µm	≤4 µm
Groove Base	ØD	≤1.6 µm	≤10 µm
Groove Flanks	B	≤3.2 µm	≤16 µm

Note: It is recommended to have 50% to 90% of the working surface material contact area value.

INSTALLATION
Easily assembled on one-piece piston. It is very important that the assembly tools must be of soft material and have no sharp edges. Before installation the sealing element must be oiled with system oil.

NOTES
It is recommended choosing suitable material and quantity for guiding element regarding the purpose of application.

PERMISSIBLE SEALING GAP			
B (mm)	**Smax (mm)**		
	150 Bar	250 Bar	400 Bar
3.2	0.30	0.20	-
4.2	0.40	0.30	-
6.3	0.50	0.40	0.25
8.1	0.60	0.50	0.35

Note: The largest sealing gap value occurring on the non-pressurized side of the seal does have a vital importance for the function of the seal an in this respect it is quite important to use the S value lower than the above indicated numbers.

K49 PISTON SEAL

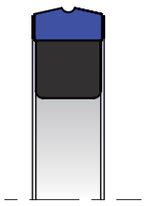

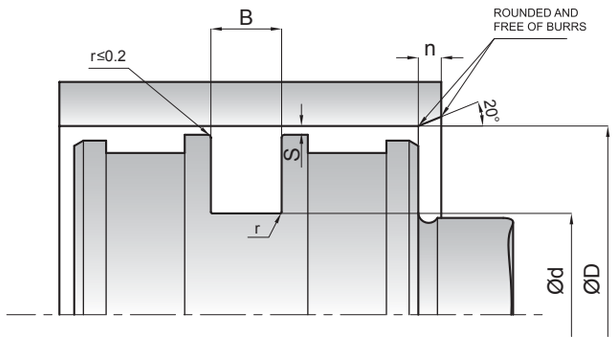

KASTAŞ NO	D(H10)	d(h9)	B(+0.2/-0.0)	n	r
K49 025-017.5	25	17.5	3.2	2	0.2
K49 028-020.5	28	20.5	3.2	2	0.2
K49 032-024.5	32	24.5	3.2	2	0.2
K49 040-029	40	29	4.2	2.5	0.4
K49 045-034	45	34	4.2	2.5	0.4
K49 050-039	50	39	4.2	2.5	0.4
K49 055-039.5	55	39.5	6.3	2.5	0.4
K49 055-044	55	44	4.2	2.5	0.4
K49 060-044.5	60	44.5	6.3	3	0.4
K49 060-049	60	49	4.2	2.5	0.4
K49 063-047.5	63	47.5	6.3	3	0.4
K49 063-052	63	52	4.2	2.5	0.4
K49 065-049.5	65	49.5	6.3	3	0.4
K49 065-054	65	54	4.2	2.5	0.4
K49 070-054.5	70	54.5	6.3	3	0.4
K49 070-059	70	59	4.2	2.5	0.4
K49 075-059.5	75	59.5	6.3	3	0.4
K49 080-064.5	80	64.5	6.3	3	0.4
K49 085-069.5	85	69.5	6.3	3	0.4
K49 090-074.5	90	74.5	6.3	3	0.4
K49 095-079.5	95	79.5	6.3	3	0.4
K49 100-079	100	79	8.1	5	0.4
K49 100-084.5	100	84.5	6.3	3	0.4
K49 110-089	110	89	8.1	5	0.4
K49 110-094.5	110	94.5	6.3	3	0.4
K49 115-094	115	94	8.1	5	0.4
K49 120-099	120	99	8.1	5	0.4
K49 125-104	125	104	8.1	5	0.4
K49 125-104/1	125	104	10.5	7	0.4
K49 130-109	130	109	8.1	5	0.4
K49 140-119	140	119	8.1	5	0.4
K49 150-129	150	129	8.1	5	0.4
K49 160-139	160	139	8.1	5	0.4
K49 180-159	180	159	8.1	5	0.4
K49 200-179	200	179	8.1	5	0.4

Please contact our customer service for the dimensions out of our stock list.

K61 PNEUMATIC COMPACT SEAL

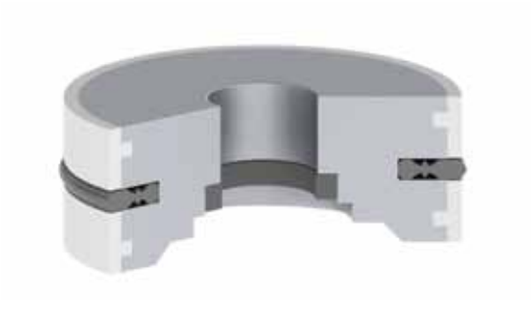

K61 is a double acting pneumatic compact seal which consists of two POM guide rings, one NBR sealing element (dynamic and static) and an aluminium body.

PRODUCT ADVANTAGES
- Ready to fit complete piston
- High abrasion resistance
- Easy installation
- Long service life

APPLICATION
Steel and aluminium pneumatic cylinders.

MATERIAL		CODE
NBR	70 SHORE A	NB7001
NBR	80 SHORE A	NB8001
POM		PM9901
ALUMINIUM		AL9901

OPERATING CONDITIONS	
MEDIA	Prepared, dried and de-oiled or oilless air
TEMPERATURE	-30°C +105°C
PRESSURE	≤12 Bar
SPEED	≤1.0 m/sn

Note: The above data are maximum values and cannot be used at the same time.

SURFACE ROUGHNESS		Rmax
Slinding Surface	ØD	≤4 µm

INSTALLATION
K61 is pushed onto the piston rod on the clamping flange towards the rod and fixed by fastening. The nut has to be secured. The sliding surface and the cylinder bore should be oiled with oil that must not go into the reaction with the sealing element during the installation process.

NOTES
Before installation the sealing element must be oiled with system oil. Pay attention not to deform the sealing element during installation. Chamfer at the cylinder bore must be proper and free of burrs.

K61 PNEUMATIC COMPACT SEAL

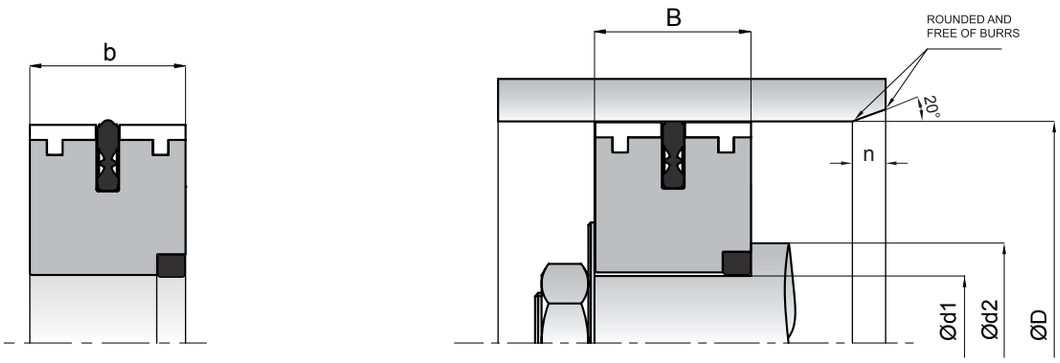

KASTAŞ NO	D (H11)	d(f8)	d1 (f8)	d2 (f8)	B(-0/+0.2)	b	n
K61-035	35	22.9	8	16	8	8	4
K61-040	40	27.9	10	18	8	8	4

Please contact our customer service for the dimensions out of our stock list.

K64 PNEUMATIC ROD SEAL

K64 is a single acting pneumatic rod seal ensuring that foreign particles are not introduced into the pneumatic cylinders. The lip is designed in a particular way that it functions as a rod seal and wiper.

PRODUCT ADVANTAGES
- Superior sealing effect
- Superior wiping effect
- Low dynamic friction
- Minimal space requirement
- Highly wear resistant

APPLICATION
Compact and special small cylinders.

MATERIAL		CODE
PU	92 SHORE A	PU9201

OPERATING CONDITIONS	
MEDIA	Prepared, dried and de-oiled compressed air
TEMPERATURE	-30°C +80°C
PRESSURE	≤16 Bar
SPEED	≤1.0 m/sn

Note: The above data are maximum values and cannot be used at the same time.

SURFACE ROUGHNESS		Rmax
Sliding Surface	Ød	≤4 µm
Groove Base	ØD	≤10 µm
Groove Flanks	B	≤15 µm

INSTALLATION
It can be assembled into closed groove without any tools. K64 does not need additional element such as circlip for axial fitting within the housing. We recommend using special assembly tool. It is very important that the assembly tools must be of soft material and have no sharp edges. Before installation the sealing element must be oiled with system oil.

K64 PNEUMATIC ROD SEAL

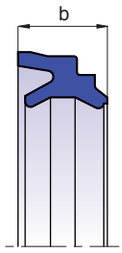

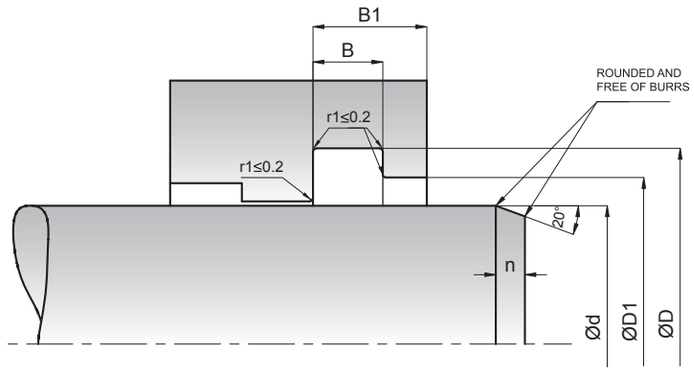

KASTAŞ NO	d(e9)	D(H10)	D1(H11)	B(+0.2/0.0)	B1	b
K64-004	4	8.1	6.7	3	3.8	4
K64-006	6	11.1	9.1	3.6	4.6	5
K64-008	8	14.1	12.1	3.6	4.6	5
K64-010	10	16.1	14.1	4.2	5.4	6
K64-012	12	16.5	14.2	3	3.6	4
K64-012/1	12	18.1	15.5	4.2	5.4	6
K64-016	16	20.5	18.2	3	3.6	4
K64-020	20	25	22.4	3.4	4	4.6
K64-025	25	30	27.4	3.4	4	4.6
K64-030	30	35.5	32.9	4	4.8	6

Please contact our customer service for the dimensions out of our stock list.

K65 PNEUMATIC PISTON SEAL

K65 is a double acting pneumatic piston seal designed to work in low axial housing heights.

PRODUCT ADVANTAGES
- Easy installation
- Low friction
- Superior sealing effect

APPLICATION
Short stroke pneumatic cylinders and valves.

MATERIAL		CODE
NBR	70 SHORE A	NB7001

OPERATING CONDITIONS	
MEDIA	Prepared, dried and de-oiled compressed air
TEMPERATURE	-30°C +105°C
PRESSURE	≤12 Bar
SPEED	≤1.0 m/sn

Note: The above data are maximum values and cannot be used at the same time.

SURFACE ROUGHNESS		Rmax
Sliding Surface	Ød	≤4 µm
Groove Base	ØD	≤10 µm
Groove Flanks	B	≤15 µm

INSTALLATION
K65 can be snapped by hand into the housing grooves provided. In case of using an assembly tool make sure that it is of soft material and have no sharp edges. Before installation the sealing element must be oiled with system oil. Special lubrication should be used on the sliding surface in case of having dried media.

NOTES
For special applications that require high temperatures, K65 can be produced in FKM material.

K65 PNEUMATIC PISTON SEAL

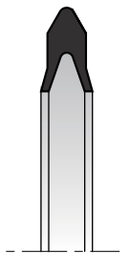

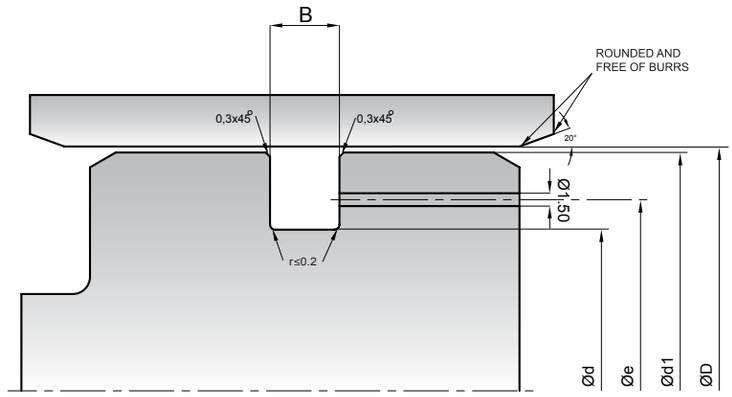

KASTAŞ NO	D(H11)	d(h11)	B(-0/+0.2)	d1(h11)	e
K65-030	30	20	2.3	29.89	21.6
K65-035	35	22.5	3	34.88	24
K65-040	40	27.5	3	39.88	29
K65-050	50	37.5	3	49.88	39
K65-060	60	44	3.5	59.86	45.5
K65-063	63	47	3.5	62.86	48.6
K65-070	70	55.5	3.5	69.85	57
K65-080	80	61	4.1	79.85	62.6
K65-090	90	71	4.1	89.83	72
K65-100	100	79	4.6	99.83	80.6
K65-125	125	101	5.1	124.8	102.6
K65-140	140	113.5	5.6	139.8	115
K65-160	160	131.5	6.2	159.79	133
K65-200	200	163	8.8	199.76	164.6
K65-355	355	313	10.8	354.64	314.6

Please contact our customer service for the dimensions out of our stock list.

K76 is a piston-rod guide strip designed to be used both for rod and piston guiding in hydraulic applications.

PRODUCT ADVANTAGES
- Good cushioning effect
- Low friction coefficient
- Able to run dry behind the sealing element
- Very good dimensional stability within operating temperatures
- Easy assembly
- Wide range of dimensions
- Can be used in medium and heavy duty applications

APPLICATION
Mobile hydraulics.

MATERIAL	CODE
POLYESTER PHENOLIC	PH6502

OPERATING CONDITIONS			
MEDIA	Mineral oils (DIN 51524)	HFA and HFB	HFC
TEMPERATURE	-40°C +120°C	+5°C +60°C	-20°C +50°C
PRESSURE	≤100 N/mm^2	≤100 N/mm^2	≤100 N/mm^2
SPEED	≤1.0 m/sn	≤1.0 m/sn	≤1.0 m/sn

Note: The above data are maximum values and cannot be used at the same time.Surface contact pressure value is given for static applications and its 270 N/mm2.

SURFACE ROUGHNESS		Ra	Rmax
Slinding Surface	ØD-Ød	≤0.4 µm	≤3.2 µm
Groove Base	ØDb-Ødp	≤1.6 µm	≤10 µm
Groove Flanks	B	≤3.2 µm	≤16 µm

INSTALLATION
Easily assembled into the housing by hand. It is very important that the assembly tools must be of soft material and have no sharp edges. Before installation guide ring must be oiled with system oil.

NOTES
To prevent hydrodynamic pressure k gap k dimension for K76 can be seen at catalog pages.

K76 SPIRAL GUIDE

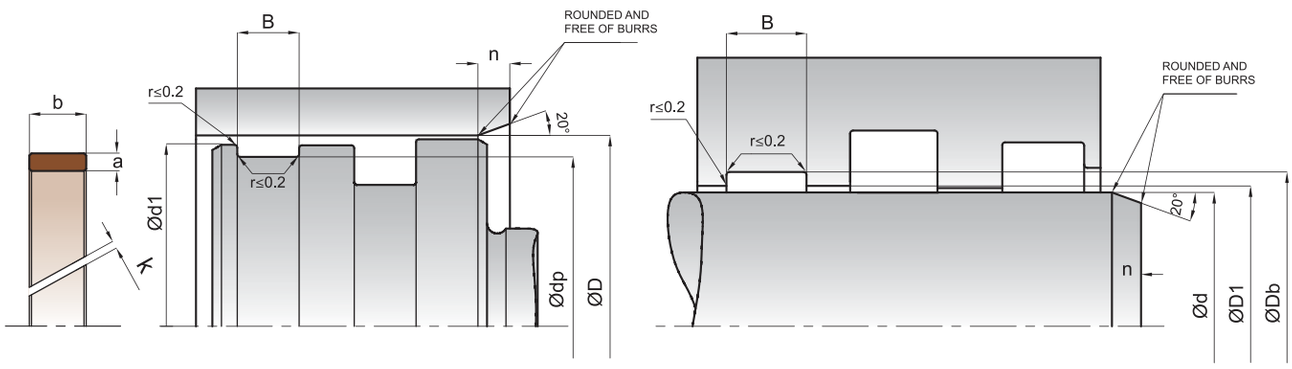

KASTAŞ NO	a	B(-0/+0.2)	b
K76-2.5X9.7	2.5	9.7	9.5
K76-2.5X15	2.5	15	14.8

Please contact our customer service for the dimensions out of our stock list.

K 78 is a piston - rod guide ring designed to be used in heavy duty hydraulic and pneumatic systems.

PRODUCT ADVANTAGES
- Able to work at high temperatures
- High dimension stability during the operating temperatures
- Easy assembly
- Wide range of dimensions
- Safely usage in heavy and medium duty applications

APPLICATION
Iron and steel industry, mobile hydraulics and heavy duty cylinders.

MATERIAL	CODE
PHENOLIC ARAMID	PH6504

OPERATING CONDITIONS			
MEDIA	Mineral oils (DIN 51524)	HFA and HFB	HFC
TEMPERATURE	-40°C +200°C	+5°C +60°C	-20°C +50°C
STATIC CONTACT PRESSURE	≤344 N/mm^2	≤344 N/mm^2	≤344 N/mm^2
DYNAMIC CONTACT PRESSURE	≤120 N/mm^2	≤120 N/mm^2	≤120 N/mm^2
SPEED	≤5 m/sn	≤5 m/sn	≤5 m/sn

SURFACE ROUGHNESS		Ra	Rmax
Sliding Surface	Ød	≤0.4 µm	≤3.2 µm
Groove Base	ØD	≤1.6 µm	≤10 µm
Groove Flanks	B	≤3.2 µm	≤16 µm

INSTALLATION
Easily assembled into the housing by hand. It is very important that the assembly tools must be of soft material and have no sharp edges. Before installation the wiper must be oiled with system oil.

NOTES
To avoid hydrodynamic pressure k interval is given. No force should be applied against the curvature of product upon assembly.

K78 PISTON - ROD GUIDE RING

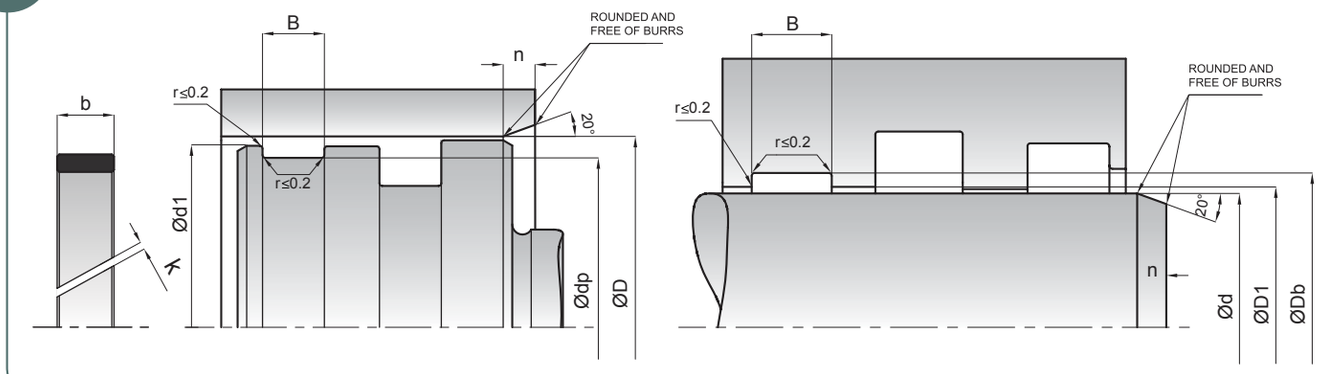

KASTAŞ NO	d(f8) dp(h8)	Db(H8) D(H9)	B(-0/+0.2)	b	d1(h9)	D1(H9)	k
K78-110	110	115	9.7	9.5	113.2	111.8	3.5
K78-110/1	110	115	15	14.8	113.2	111.8	3.5
K78-115	115	120	9.7	9.5	118.2	116.8	3.5
K78-115/1	115	120	15	14.8	118.2	116.8	3.5
K78-120	120	125	9.7	9.5	123.2	121.8	3.5
K78-120/1	120	125	15	14.8	123.2	121.8	3.5
K78-125	125	130	9.7	9.5	128.2	126.8	3.5
K78-125/1	125	130	15	14.8	128.2	126.8	3.5
K78-130	130	135	9.7	9.5	133.2	131.8	3.5
K78-130/1	130	135	15	14.8	133.2	131.8	3.5
K78-135	135	140	9.7	9.5	138.2	136.8	3.5
K78-135/1	135	140	15	14.8	138.2	136.8	3.5
K78-140	140	145	9.7	9.5	143.2	141.8	3.5
K78-140/1	140	145	15	14.8	143.2	141.8	3.5
K78-140/3	140	145	20	19.8	143.2	141.8	3.5
K78-145	145	150	9.7	9.5	148.2	146.8	3.5
K78-145/1	145	150	15	14.8	148.2	146.8	3.5
K78-150	150	155	15	14.8	153.2	151.8	3.5
K78-150/1	150	155	9.7	9.5	153.2	151.8	3.5
K78-155	155	160	9.7	9.5	158.2	156.8	3.5
K78-155/1	155	160	9.7	9.5	158.2	156.8	3.5
K78-160/1	160	165	15	19.8	163.2	161.8	3.5
K78-164	164	170	9.7	9.5	167.2	165.8	3.5
K78-165	165	170	9.7	9.5	168.2	166.8	3.5
K78-175	175	180	9.7	9.5	178.2	176.8	3.5
K78-175/1	175	180	15	14.8	178.2	176.8	3.5
K78-180	180	185	15	14.8	183.2	181.8	3.5
K78-184	184	190	15	14.8	187.2	185.8	3.5
K78-185	185	190	9.7	9.5	188.2	186.8	3.5
K78-185/1	185	190	15	14.8	188.2	186.8	3.5
K78-194	194	200	20	19.8	197.2	195.8	3.5
K78-195	195	200	9.7	9.5	198.2	196.8	3.5
K78-195/1	195	200	15	14.8	198.2	196.8	3.5
K78-209	209	215	20	19.8	213.2	210.8	3.5
K78-219	219	225	20	19.8	217.2	220.8	3.5

Please contact our customer service for the dimensions out of our stock list.

K85 is a double acting cover seal specially designed for static applications.

PRODUCT ADVANTAGES
- High operating pressures
- Interchangeable for o-ring and o-ring with back-up ring
- Easy and secure installation
- No need for additional back-up ring
- High wear resistant

APPLICATION
All the hydraulic applications that o-rings are being used.

MATERIAL		CODE
PU	94 SHORE A	PU9401

OPERATING CONDITIONS			
MEDIA	Mineral oils (DIN 51524)	HFA and HFB	HFC
TEMPERATURE	-35°C +110°C	+5°C +50°C	-20°C +50°C
PRESSURE	≤500 Bar	≤500 Bar	≤500 Bar

Note: The above data are maximum values and cannot be used at the same time.

SURFACE ROUGHNESS		Ra	Rmax
Sliding Surface	Ød	≤0.8 µm	≤3.2 µm
Groove Base	ØD	≤1.6 µm	≤6.3 µm
Groove Flanks	B	≤6.3 µm	≤16 µm

INSTALLATION
Easily assembled by hand. It is very important that the assembly tools must be of soft material and have no sharp edges. Before installation the sealing element must be oiled with system oil.

NOTES
K85 is a double acting cover seal for outer sealing. The diffculties faced during an o-ring assembly such as twisting, ripping was solved with this design. It can be used without a back-up ring at high pressures. Due to the material, K85 does have good wear resistance to extrusion and shows good sealing performance in double acting applications.

K85 STATIC SEAL

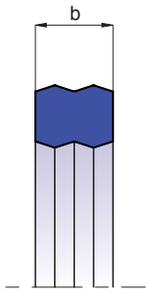

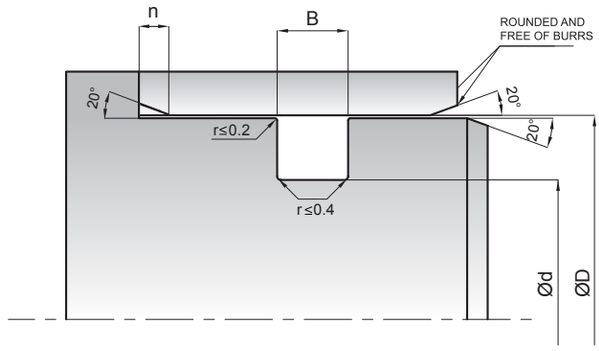

KASTAŞ NO	D(H8)	d(h9)	B(-0/+0.2)
K85-018	18	14	5.8
K85-022	22	19.1	3.5
K85-025	25	22.1	3.5
K85-030	30	25.5	4.5
K85-035	35	30.5	4.5
K85-040	40	35.2	5.4
K85-044	44	39.5	4.5
K85-050/1	50	44.6	6.2
K85-050	50	45.4	5.4
K85-054	54	49.5	4.5
K85-058	58	53.4	3.9
K85-068	68	63.5	4.5
K85-070	70	64.6	6.2
K85-075	75	69.6	6.2
K85-076	76.4	70	5.5
K85-085	85	81.5	4.5
K85-086	86	81.5	4.5
K85-086/1	86.4	80	5.5
K85-100	100	94.4	5.3
K85-111	111.4	105	5.5
K85-115	115	106.6	8.5
K85-125	125	116.6	8.5
K85-133	133.4	125	7
K85-148	148.4	140	7
K85-158	158.4	150	7
K85-165	165	156.6	8.5
K85-188	188.2	180	7
K85-200	200	191.6	8.5
K85-225	225	213	10.7
K85-250	250	235	10.7
K85-250/1	250	238	10.7
K85-280	280	268	10.7
K85-320	320	308	10.7

Please contact our customer service for the dimensions out of our stock list.

K86 is a static sealing element designed to replace o-ring+back-up ring combination.

PRODUCT ADVANTAGES
- High operating pressures
- High reliability
- Interchangeable for O-ring and O-ring with back-up ring
- Easy and secure installation
- No need for additional back-up ring
- High wear resistance
- Availability to be used in a wide range of diameters
- Reliable sealing even with ovality of the tube

APPLICATION
All the hydraulic applications that O-rings are being used.

MATERIAL		CODE
PU	92 SHORE A	PU9201

OPERATING CONDITIONS			
MEDIA	Mineral oils (DIN 51524)	HFA and HFB	HFC
TEMPERATURE	-40°C +100°C	+5°C +50°C	-20°C +50°C
PRESSURE	≤500 Bar	≤500 Bar	≤500 Bar

Note: The above data are maximum values and cannot be used at the same time.

SURFACE ROUGHNESS		Ra	Rmax
Sliding Surface	Ød	≤0.8 µm	≤3.2 µm
Groove Base	ØD	≤1.6 µm	≤6.3 µm
Groove Flanks	B	≤6.3 µm	≤16 µm

INSTALLATION
Easily assembled by hand. It is very important that the assembly tools must be of soft material and have no sharp edges. Before installation the sealing element must be oiled with system oil.

NOTES
K86 is a single acting seal static sealing. K86 can used on pulsating systems.

K86 STATIC SEAL

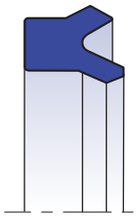

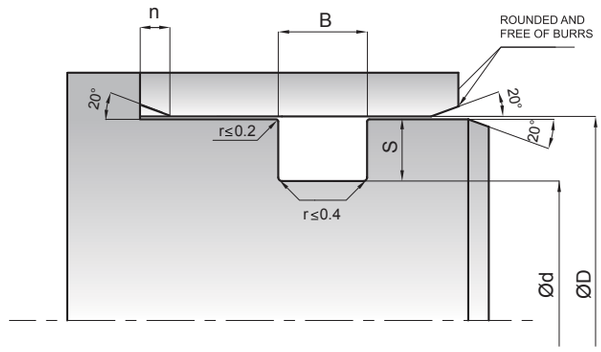

KASTAŞ NO	Dmin (H8)	Dmax (H8)	B (-0/+0.25)	S
K86-90	90	91	8.2	4
K86-105	105	112	8.2	4
K86-112	112	120	8.2	4
K86-127	127	135	8.2	4
K86-154	154	164	8.2	4

Note: Nominal D values are determined as Dmin. "d" should be calculated according to d=D-2S and the tolerance of d is "h9".

K87 FLUID CONNECTOR SEAL

K87 fluid connector seal is specially designed for static applications.

PRODUCT ADVANTAGES
- Long service life with superior sealing performance
- No twisting in the groove
- Dimensional stability under pressure
- Provides better sealing performance compared to metal-metal application

APPLICATION
Threaded fasteners

MATERIAL		CODE
NBR	85 SHORE A	NB8501

OPERATING CONDITIONS			
MEDIA	Mineral oils (DIN 51524)	HFA and HFB	HFC
TEMPERATURE	-30°C +105°C	+5°C +50°C	-20°C +50°C
PRESSURE	≤400 Bar	≤400 Bar	≤400 Bar

SURFACE ROUGHNESS		Ra	Rmax
Sliding Surface	Ød	≤0.8 µm	≤3.2 µm
Groove Base	ØD	≤1.6 µm	≤6.3 µm
Groove Flanks	B	≤6.3 µm	≤16 µm

INSTALLATION
Attention must be paid not to deform the product during the assembly over thread; assembly tools must be used when needed.

K87 FLUID CONNECTOR SEAL

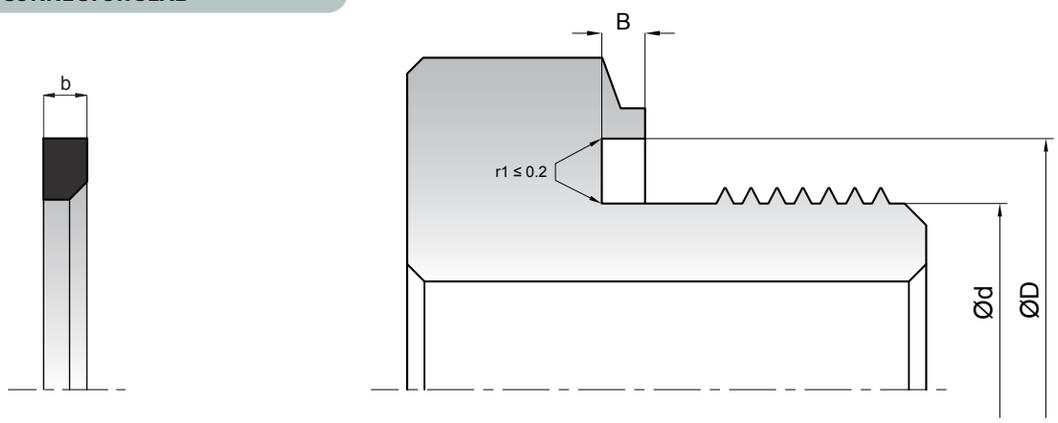

KASTAŞ NO	d(f7)	D(H8)	b
K87-010	8.4	11.9	1
K87-012	9.8	14.4	1.5
K87-014	11.6	16.5	1.5
K87-016	13.8	18.9	1.5
K87-017	14.7	18.9	1.5
K87-018	15.7	20.9	1.5
K87-020	17.8	22.9	1.5
K87-021	18.5	23.9	1.5
K87-022	19.6	24.3	1.5
K87-027	23.9	29.2	1.5
K87-033	29.7	35.7	2
K87-042	38.8	45.8	2
K87-048	44.7	50.7	2

Please contact our customer service for the dimensions out of our stock list.

K94 is a single acting wiper ensuring that foreign particles are not introduced into the hydraulic system.

PRODUCT ADVANTAGES
• Very good wiping performance
• Simple, easy-construction groove
• No twisting in the housing
• Specially designed to prevent hydrodynamic pressure build-up
• Specially designed to provide excellent sealing against big particles, humidity and water
• Used in heavy conditions by the good mechanical properties of Polyurethane material

APPLICATION
Mining industry, heavy-duty , concrete pumps, mobile applications, telescopic cylinders.

MATERIAL		CODE
PU	94 SHORE A	PU9401

OPERATING CONDITIONS			
MEDIA	Mineral oils (DIN 51524)	HFA and HFB	HFC
TEMPERATURE	-35°C +110°C	+5°C +50°C	-20°C +50°C
SPEED	≤1.0 m/sn	≤1.0 m/sn	≤1.0 m/sn

Note: The above data are maximum values and cannot be used at the same time.

SURFACE ROUGHNESS		Ra	Rmax
Sliding Surface	Ød	≤0.4 µm	≤3.2 µm
Groove Base	ØD	≤1.6 µm	≤10 µm
Groove Flanks	B	≤3.2 µm	≤16 µm

Note: It is recommended to have 50% to 90% of the working surface material contact area value.

INSTALLATION
Easily installed to closed type groove. We recommend using special assembly tool (See section; Hydraulic Sealing Elements General Installation Information). It is very important that the assembly tools must be of soft material and have no sharp edges.

K94 WIPER

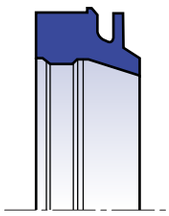

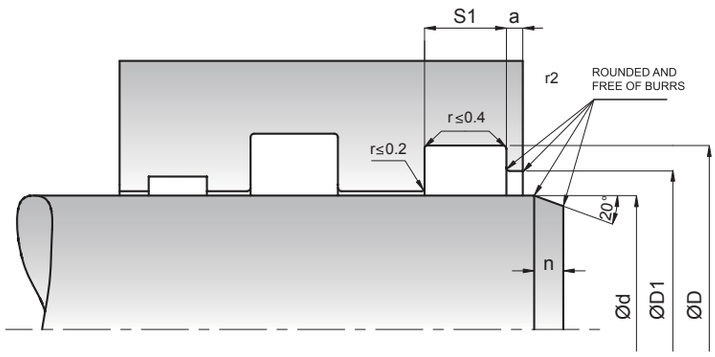

KASTAŞ NO	d(f8)	D(H11)	D1(H11)	S1(-0/+0.2)Z	a
K94-50	50	58	55	5	1.5
K94-60	60	70	67	6.3	1.5
K94-70	70	82,6	78,4	8	2
K94-80	80	90	87	6.7	1.8
K94-80/1	80	90	87	6.3	1.5
K94-90	90	102,2	96	7.1	2.8
K94-100	100	112,2	106	7.1	2.8
K94-110	110	125	120	9.5	2
K94-120	120	135	130	9.5	2
K94-125	125	140	135	9.5	2
K94-130	130	145	140	9.5	2.25
K94-140	140	155	150	9.5	2

Please contact our customer service for the dimensions out of our stock list.

K98 is a single acting piston - rod seal and designed to have symmetrical lips in order to be used both for rod and piston applications. O-ring acts as a spring and provides sealing contact under low pressures and shock pressures.

PRODUCT ADVANTAGES

- Good sealing performance under low pressures and shock pressures
- Superior static and dynamic sealing effect
- Easy assembly into closed grooves
- Simple groove design
- Economical sealing solution

APPLICATION

Fork-lift trucks, injection moulding machines, agricultural machinery and standard cylinders.

MATERIAL		CODE
NBR	70 SHORE A	NB7001
PU	92 SHORE A	PU9201

OPERATING CONDITIONS			
MEDIA	Mineral oils (DIN 51524)	HFA and HFB	HFC
TEMPERATURE	-30°C +100°C	+5°C +50°C	-20°C +50°C
PRESSURE	≤400 Bar	≤400 Bar	≤400 Bar
SPEED	≤0.5 m/sn	≤0.5 m/sn	≤0.5 m/sn

Note: The above data are maximum values and cannot be used at the same time.

SURFACE ROUGHNESS		Ra	Rmax
Sliding Surface	Ød	≤0.4 µm	≤3.2 µm
Groove Base	ØD	≤1.6 µm	≤10 µm
Groove Flanks	B	≤3.2 µm	≤16 µm

Note: It is recommended to have 50% to 90% of the working surface material contact area value.

INSTALLATION

Easily assembled into closed grooves according to the minimum diameter values that are given in the below table. Open grooves or special assembly tools should be used for the values that are outside this table. It is very important that the assembly tools must be of soft material and have no sharp edges. Before installation the wiper must be oiled with system oil.

MINUMUM DIAMETER VALUES FOR CLOSED TYPE OF GROOVES							
(D-d)/2 (mm)	4	5	6	7.7	10	12.5	15
dmin (mm)	25	30	40	50	80	100	105

NOTES

The permissible sealing gap values of K98 piston -rod seal is given in the below table.

PERMISSIBLE SEALING GAP			
	Smax		Smax (mm)
t=(D-d)/2	150 Bar	250 Bar	400 Bar
t≤5	0.30	0.20	0.15
t≤5	0.35	0.25	0.20

Note: The largest sealing gap value occurring on the non-pressurized side of the seal does have a vital importance for the function of the seal and in this respect it is quite important to use the S value lower than the above indicated numbers.

K98 PISTON - ROD SEAL

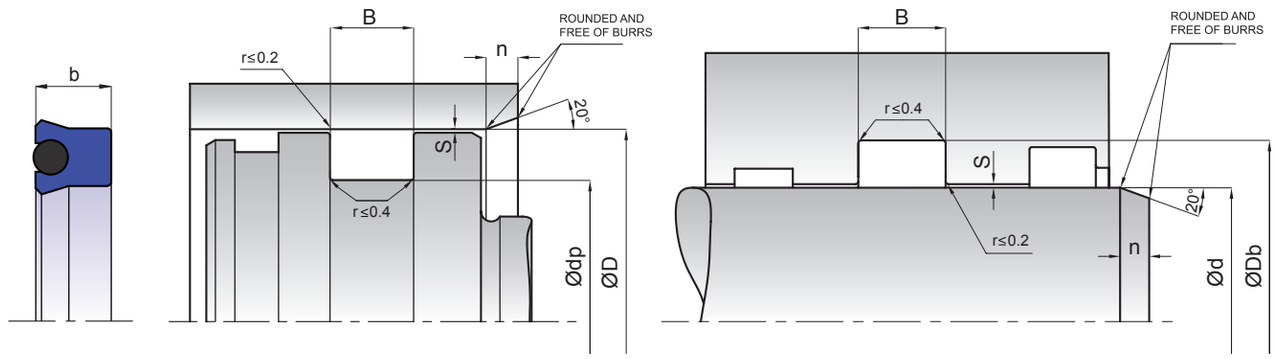

KASTAŞ NO	d(f7) / dp(h11)	Db (H11)/d(H11)	b	B(-0/+0.2)
K98-019	19.05	25.4	6.35	7.35
K98-022	22.23	28.58	3.18	3.68
K98-025	25.4	31.75	6.35	7.35
K98-025/1	25.4	34.93	4.76	5.26
K98-025/2	25.4	34.93	7.94	8.94
K98-025/3	25.4	38.1	6.35	7.35
K98-031	31.75	38.1	6.35	7.35
K98-031/1	31.75	41.28	7.94	8.94
K98-038	38.1	47.63	7.94	8.94
K98-038/1	38.1	47.63	9.53	10.53
K98-038/2	38.1	50.8	9.53	10.53
K98-044	44.45	53.98	9.53	10.53
K98-047	47.62	63.5	11.5	12.5
K98-050	50.8	60.33	9.53	10.53
K98-050/1	50.8	63.5	9.53	10.53
K98-057	57.15	69.85	6.35	7.35
K98-063	63.5	76.2	9.53	10.53
K98-076	76.2	88.9	9.53	10.53
K98-088	88.9	101.6	9.53	10.53
K98-092	92.08	101.6	9.53	10.53

Please contact our customer service for the dimensions out of our stock list.

K101 is a single acting wiper ensuring that foreign particles are not introduced into the hydraulic cylinders. The lip is designed in a particular way that it reliably wipes off the dirt but leaves a residual oil film on the rod.

PRODUCT ADVANTAGES
- Good wiping effect
- Simple groove design
- No twisting in the housing
- Economical sealing solution
- Easy installation

APPLICATION
Agricultural machinery, single acting cylinders in industrial equipment.

MATERIAL		CODE
PU	92 SHORE A	PU9201

OPERATING CONDITIONS			
MEDIA	Mineral oils (DIN 51524)	HFA and HFB	HFC
TEMPERATURE	-40°C +100°C	+5°C +50°C	-20°C +50°C
SPEED	≤1.0 m/sn	≤1.0 m/sn	≤1.0 m/sn

Note: The above data are maximum values and cannot be used at the same time.

SURFACE ROUGHNESS		Ra	Rmax
Sliding Surface	Ød	≤0.4 µm	≤3.2 µm
Groove Base	ØD	≤1.6 µm	≤10 µm
Groove Flanks	B	≤3.2 µm	≤16 µm

INSTALLATION
It is very important that the assembly tools must be of soft material and have no sharp edges.

K101 EXTERNAL WIPER

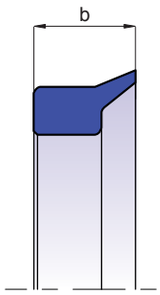

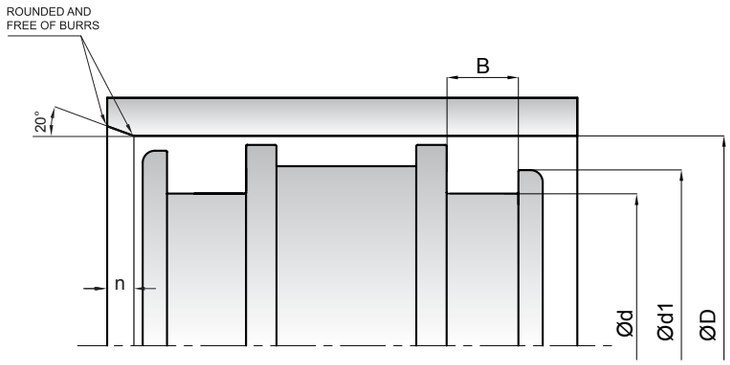

KASTAŞ NO	D(H11)	d(h11)	B	d1(h11)	r1	b
K101-080	80	71.4	5.3	77	1	7
K101-085	85	76.4	5.3	82	1	7
K101-089	89	80	7	85	1	10
K101-090	90	81.4	5.3	87	1	7
K101-100	100	91.4	5.3	97	1	7
K101-109	109	100	7	105	1	10
K101-110	110	101.4	5.3	107	1	7
K101-125	125	116.4	5.3	122	1	7

Please contact our customer service for the dimensions out of our stock list.

K103 DOUBLE WIPER

K103 is a single acting double wiper ensuring that foreign particles are not introduced into the hydraulic cylinders. The lip is designed in a particular way that it reliably wipes off the dirt but leaves a residual oil film on the rod.

PRODUCT ADVANTAGES

- Good wiping effect
- Wide range of dimensions
- No twisting in the housing
- Wiper lip reliably wipes away dirt and leaves a residual oil film on the retracting rod.
- Double lip makes additional protection to prevent the particles to enter into the cylinder
- Easy installation

APPLICATION

Construction machinery, fork-lift trucks, injection moulding machines, agricultural machinery and standard cylinders.

MATERIAL		CODE
PU	92 SHORE A	PU9201

OPERATING CONDITIONS			
MEDIA	Mineral oils (DIN 51524)	HFA and HFB	HFC
TEMPERATURE	-40°C +100°C	+5°C +50°C	-20°C +50°C
SPEED	≤1.0 m/sn	≤1.0 m/sn	≤1.0 m/sn

Note: The above data are maximum values and cannot be used at the same time.

SURFACE ROUGHNESS		Ra	Rmax
Sliding Surface	Ød	≤0.4 µm	≤3.2 µm
Groove Base	ØD	≤1.6 µm	≤10 µm
Groove Flanks	B	≤3.2 µm	≤16 µm

INSTALLATION

Generally, wiper can be easily fitted into the closed housing by deforming into a kidney shape. It is very important that the assembly tools must be of soft material and have no sharp edges. Before installation the wiper must be oiled with system oil.

K103 DOUBLE WIPER

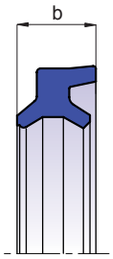

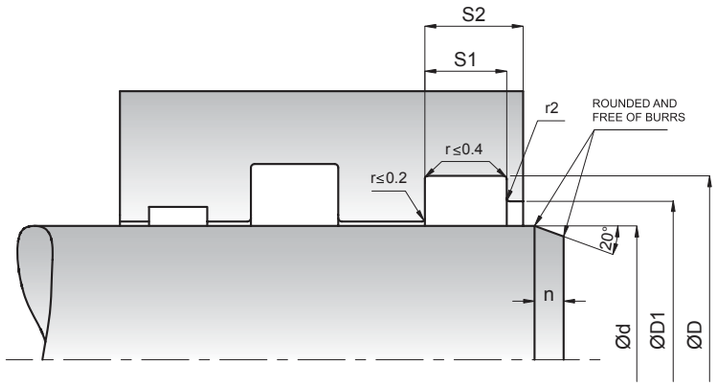

KASTAŞ NO	d (f8)	D (+0 -0.2)	D1 (H10)	S1 (-0/+0.2)	S2
K103-020	20	28	24.3	5	7
K103-025	25	33	29.3	5	7
K103-028	28	36	32.3	5	7
K103-030	30	38	34	6	8
K103-032	32	40	36	6	8
K103-035	35	43	39	6	8
K103-040	40	48	44	6	8
K103-045	45	53	49	6	8
K103-050	50	58	54	6	8
K103-055	55	63	59	6	8
K103-060	60	68	64	6	8
K103-070	70	80	75	7	10
K103-075	75	85	80	7	10
K103-080	80	90	85	7	10
K103-090	90	100	95	7	10
K103-100	100	110	105	7	10
K103-125	125	138	132	8	11
K103-140	140	153	147	8	11
K103-150	150	163	157	8	11
K103-180	180	193	187	8	11
K103-200	200	213	207	8	11

Please contact our customer service for the dimensions out of our stock list.

K106 PNEUMATIC WIPER

K106 is a single acting pneumatic wiper ensuring that foreign particles do not penetrate into the pneumatic cylinders. The lip is designed in a particular way that it functions as a rod seal and wiper.

PRODUCT ADVANTAGES
- Good wiping
- Superior sealing
- Low dynamic friction
- Small sealing element groove dimensions
- Smooth movement and good sealing at low pressures

APPLICATION
Compact and special small cylinders.

MATERIAL		CODE
NBR	80 SHORE A	NB8001

OPERATING CONDITIONS	
MEDIA	Prepared, dried and de-oiled compressed air
TEMPERATURE	-30°C +105°C
PRESSURE	≤12 Bar
SPEED	≤1.0 m/sn

Note: The above data are maximum values and cannot be used at the same time.

SURFACE ROUGHNESS		Rmax
Slinding Surface	Ød	≤4 µm
Groove Base	ØD	≤10 µm
Groove Flanks	B	≤15 µm

INSTALLATION
It can be assembled into closed groove by hand. It is very important that the assembly tools must be of soft material and have no sharp edges. Before installation the sealing element must be oiled with system oil.

NOTES
For special applications that require high temperatures, K106 can be produced in FKM.

K106 PNEUMATIC WIPER

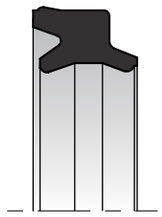

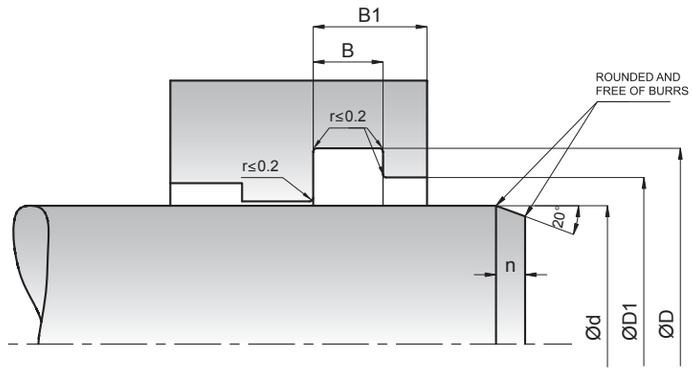

KASTAŞ NO	d (f9)	D (H11)	D1(-0/+0.2)	B(-0/+0.2)	B1
K106-008	8	12	9.6	4	6
K106-010	10	14	11.6	4	6
K106-012	12	16	13.6	4	6
K106-014	14	18	15.6	4	6
K106-016	16	24	19.4	6	8
K106-020	20	28	23.4	6	8
K106-022	22	30	25.4	6	8
K106-025	25	33	28.4	6	8
K106-040	40	50	44	7	9
K106-050	50	60	54	7	9

Please contact our customer service for the dimensions out of our stock list.

K130 PNEUMATIC ROD SEAL

K130 is a single acting pneumatic rod seal made of NBR.

PRODUCT ADVANTAGES
- Superior sealing performance
- Easy installation, simple groove design
- Smooth movement and good sealing at low pressures
- Low friction

APPLICATION
Short stroke and special small cylinders.

MATERIAL		CODE
NBR	80 SHORE A	NB8001

OPERATING CONDITIONS	
MEDIA	Prepared, dried and de-oiled compressed air
TEMPERATURE	-30°C +105°C
PRESSURE	≤12 Bar
SPEED	≤1.0 m/sn

Note: The above data are maximum values and cannot be used at the same time.

SURFACE ROUGHNESS		Rmax
Slinding Surface	Ød	≤4 µm
Groove Base	ØD	≤10 µm
Groove Flanks	B	≤14 µm

INSTALLATION
It is very important that the assembly tools must be of soft material and have no sharp edges. Before installation the sealing element must be oiled with system oil.

NOTES
For special applications that require high temperatures, K130 can be produced in FKM material.

K130 PNEUMATIC ROD SEAL

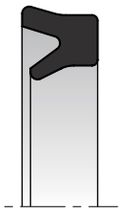

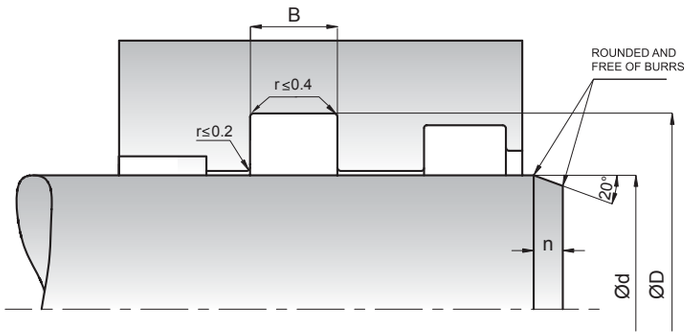

KASTAŞ NO	d (f8)	D (H11)	b	B(-0/+0.2)
K130-003	3	6	2.1	2.5
K130-004	4	7	2.1	2.5
K130-005	5	8	2.1	2.5
K130-006	6	9	2.1	2.5
K130-007	7	10	2.1	2.5
K130-008	8	11	2.1	2.5
K130-010	10	13	2.1	2.5
K130-010/1	10	14	2.8	3.2
K130-012	12	16	2.8	3.2
K130-014	14	18	2.8	3.2
K130-016	16	20	2.8	3.2
K130-020	20	24	2.8	3.2

Please contact our customer service for the dimensions out of our stock list.

K501 PISTON SEAL

K501 is a two piece double acting piston seal consisting of a thermoplastic sealing element and one energizer elastomer ring.

ADVANTAGES
- Excellent sealing performance under static and dynamic applications
- Simple groove design
- Easy fit without installation tool
- Superior sealing performance at high and variable pressure levels
- Longer service life due to high abrasion resistance
- Excellent sealing at high surface roughness
- Outstanding resistance to pressure shocks

APPLICATION
Heavy duty cylinders and construction machinery.

MATERIAL		CODE
NBR	70 SHORE A	NB7001
PA		PA9904

OPERATING CONDITIONS			
MEDIA	Mineral oils (DIN 51524)	HFA and HFB	HFC
TEMPERATURE	-30°C +105°C	+5°C +60°C	-20°C +50°C
PRESSURE	≤500 Bar	≤500 Bar	≤500 Bar
SPEED	≤1 m/sn	≤1 m/sn	≤1 m/sn

Note: The above data are maximum values and cannot be used at the same time.

SURFACE ROUGHNESS		Ra	Rmax
Sliding Surface	Ød	≤0.4 µm	≤4 µm
Groove Base	ØD	≤1.6 µm	≤6.3 µm
Groove Flanks	B	≤3.2 µm	≤16 µm

Note: It is recommended to have 50% to 90% of the working surface material contact area value.

INSTALLATION
Easy installation into one-piece piston head.
Sealing elements must be pre-lubed with system oil before installation.

NOTES
It is recommended to use with minimum two piston guide rings in long-stroke cylinders, minimum one guide ring in short stroke and under low radial loads.

PERMISSIBLE SEALING GAP	
B (mm)	**Smax (mm)**
4.2	0.35
6.3	0.50
8.1	0.60

Note: All the above mentioned "S" values are maximum and it's vital to use lower values for system security.

K501 PISTON SEAL

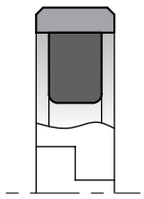

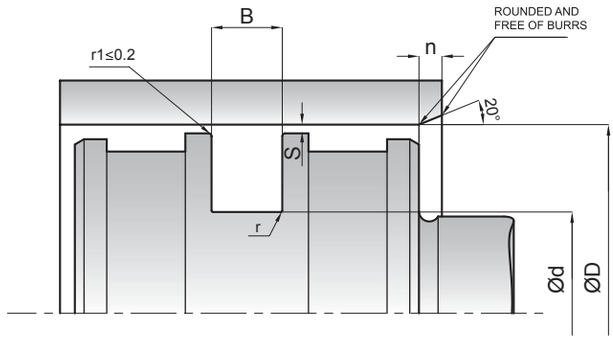

KASTAŞ NO	D	d	B	r	n
K501-050	50	39	4.2	1	6
K501-060	60	44.5	6.3	1.3	8
K501-063/1	63	42	8.1	1.8	10.5
K501-063	63	47.5	6.3	1.3	8
K501-070	70	51.7	7	1.3	8
K501-075	75	54	8.1	1.8	10.5
K501-080/1	80	59	8.1	1.8	10.5
K501-080	80	64.5	6.3	1.3	6
K501-085	85	69.5	6.3	1.3	6
K501-090/1	90	69	8.1	1.8	10.5
K501-090	90	74.5	6.3	1.3	6
K501-095	95	74	8.1	1.8	10.5
K501-100/1	100	79	8.1	1.8	10.5
K501-100	100	84.5	6.3	1.3	6
K501-105	105	84	8.1	1.8	10.5
K501-105/1	105	89.5	6.3	1.3	6
K501-110	110	94.5	6.3	1.3	6
K501-115	115	94	8.1	1.8	10.5
K501-120	120	99	8.1	1.8	10.5
K501-125	125	104	8.1	1.8	10.5
K501-125/1	125	110	6.3	1.3	10.5
K501-126	126	105	8.1	1.8	10.5
K501-130	130	109	8.1	1.8	10.5
K501-135	135	114	8.1	1.8	10.5
K501-140	140	119	8.1	1.8	10.5
K501-145	145	124	8.1	1.8	10.5
K501-147	147	126	8.1	1.8	10.5
K501-150	150	129	8.1	1.8	10.5
K501-160	160	139	8.1	1.8	10.5
K501-165	165	144	8.1	1.8	10.5
K501-170	170	149	8.1	1.8	10.5
K501-175	175	154	8.1	1.8	10.5
K501-180	180	159	8.1	1.8	10.5
K501-185	185	164	8.1	1.8	10.5
K501-190	190	169	8.1	1.8	10.5

Please contact our customer service for the dimensions out of our stock list.

K504 COMPACT PISTON SEAL

K504 is a three piece double acting compact seal which consists of one fabric reinforced elastomeric sealing element and two thermoplastic guide back-up rings.

PRODUCT ADVANTAGES
- Low friction, free of stick-slip
- Improved abrasion resistance
- Good dynamic and static sealing
- Long service life
- Reliable solution in water and water based media

APPLICATION
Mining equipment, iron and steel industry, marine hydraulics and earth moving equipment.

MATERIAL		CODE
NBR	80 SHORE A	NB8001
COTTON FABRIC NBR		FB8001
POM		PM9901

OPERATING CONDITIONS			
MEDIA	Mineral oils (DIN 51524)	HFA and HFB	HFC
TEMPERATURE	-30°C +105°C	+5°C +60°C	-20°C +50°C
PRESSURE	≤500 Bar	≤500 Bar	≤500 Bar
SPEED	≤0.5 m/sn	≤0.5 m/sn	≤0.5 m/sn

Note: The above data are maximum values and cannot be used at the same time.

SURFACE ROUGHNESS		Ra	Rmax
Sliding Surface	Ød	≤0.4 µm	≤3.2 µm
Groove Base	ØD	≤1.6 µm	≤6.3 µm
Groove Flanks	B	≤3.2 µm	≤16 µm

Note: It is recommended to have 50% to 90% of the working surface material contact area value

INSTALLATION
K504 profile has been designed to be installed in a closed or open grooves taking the indicated catalogue information into consideration. We recommend having open groove design for dimensions that are smaller than Ø 50 mm. It is very important that the assembly tools must be of soft material and have no sharp edges. Before installation the sealing element must be oiled with system oil.

PERMISSIBLE SEALING

ØD	Smax (mm)			
	250 Bar	350 Bar	400 Bar	500 Bar
≤80 mm	0.60	0.55	0.45	0.35
≤80 mm	0.65	0.60	0.50	0.40

K504 COMPACT PISTON SEAL

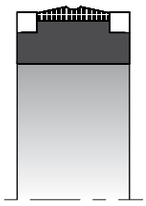

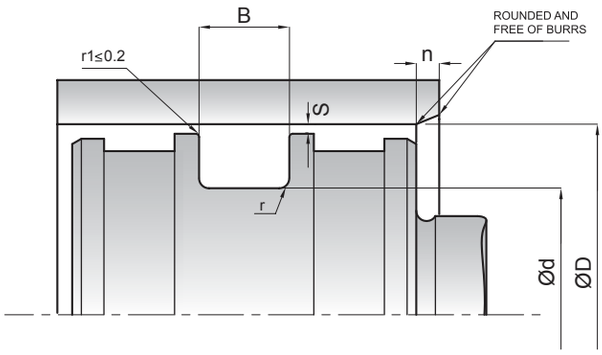

KASTAŞ NO	D(H8)	d(h9)	B(+0/-0.2)	n
K504 080-066	80	66	16.5	5
K504 110-095	110	95	15.5	5
K504-120-105	120	105	15.5	5
K504 125-110	125	110	15.7	5
K504 130-113	130	113	20.5	6
K504 140-125	140	125	15.9	5
K504 150-135	150	135	15.5	5
K504 170-150	170	150	15.5	6
K504 180-163	180	163	20	6
K504 185-165	185	165	15.5	6
K504 200-180	200	180	15.5	6
K504 225-205	225	205	24.5	6
K504-240-220	240	220	25	6
K504 250-230	250	230	25.5	6
K504 320-300	320	300	25.5	6

Please contact our customer service for the dimensions out of our stock list.

K505 PISTON SEAL

K505 is a three piece double acting compact seal which consists of one fabric reinforced elastomeric sealing element and two thermoplastic guide back-up rings.

PRODUCT ADVANTAGES
- Low friction, free of stick-slip
- Improved abrasion resistance
- Good dynamic and static sealing
- Long service life
- Reliable solution in water and water based media
- Designed to whitstand up to 1500 bar static pressure

APPLICATION
Mining equipment, iron and steel industry, marine hydraulics and earth moving equipment.

MATERIAL		CODE
NBR	80 SHORE A	NB8001
COTTON FABRIC NBR		FB8001
POM		PM9901

OPERATING CONDITIONS			
MEDIA	Mineral oils (DIN 51524)	HFA and HFB	HFC
TEMPERATURE	-30°C +105°C	+5°C +60°C	-20°C +50°C
PRESSURE	≤500 Bar	≤500 Bar	≤500 Bar
SPEED	≤0.5 m/sn	≤0.5 m/sn	≤0.5 m/sn

Note: The above data are maximum values and cannot be used at the same time.

SURFACE ROUGHNESS		Ra	Rmax
Sliding Surface	Ød	≤0.4 µm	≤3.2 µm
Groove Base	ØD	≤1.6 µm	≤6.3 µm
Groove Flanks	B	≤3.2 µm	≤16 µm

Note: It is recommended to have 50% to 90% of the working surface material contact area value

INSTALLATION
K505 profile has been designed to be installed in a closed or open grooves taking the indicated catalogue information into consideration. Open groove piston design should be used with K505 design. It is very important that the assembly tools must be of soft material and have no sharp edges. Before installation the sealing element must be oiled with system oil.

PERMISSIBLE SEALING				
ØD	**Smax (mm)**			
	250 Bar	350 Bar	400 Bar	500 Bar
≤80 mm	0.60	0.55	0.45	0.35
≤80 mm	0.65	0.60	0.50	0.40

K505 PISTON SEAL

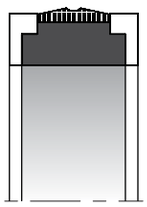

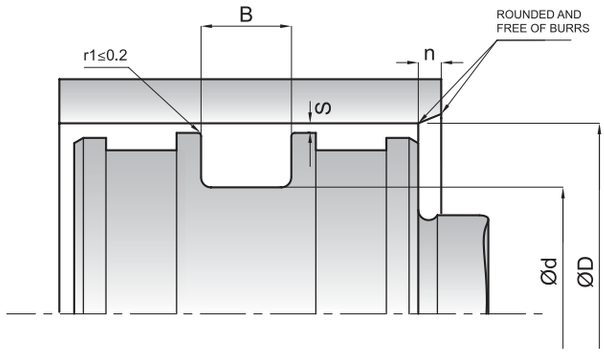

KASTAŞ NO	D(H8)	d(h9)	B(+0/-0.2)	n
K505 140-125	140	125	20.5	5

Please contact our customer service for the dimensions out of our stock list.

K518 COMPACT PISTON SEAL

K518 is a five piece double acting compact seal which consists of one elastomeric nitrile rubber sealing element, two polyester elastomer back-up rings on both sides to prevent extrusion into the sealing gap and two special profiled guide rings produced from thermoplastic to absorb transverse forces.

PRODUCT ADVANTAGES
- Superior radial load bearing capacity
- Economic sealing and guiding solution
- Simple groove design, one-piece piston possible
- Long service life
- Simple snap installation

APPLICATION
Mobile hydraulics, back-hoe loaders, fork-lift trucks, agricultural machinery, standard cylinders.

MATERIAL		CODE
NBR	80 SHORE A	NB8001
POM		PM9905
TPE		TP7301

OPERATING CONDITIONS			
MEDIA	Mineral oils (DIN 51524)	HFA and HFB	HFC
TEMPERATURE	-30°C +105°C	+5°C +60°C	-20°C +50°C
PRESSURE	≤400 Bar	≤400 Bar	≤400 Bar
SPEED	≤0.5 m/sn	≤0.5 m/sn	≤0.5 m/sn

Note: The above data are maximum values and cannot be used at the same time.

SURDACE ROUGHNESS		Ra	Rmax
Sliding Surface	Ød	≤0.4 µm	≤4.0 µm
Groove Base	ØD	≤1.6 µm	≤6.3 µm
Groove Flanks	B	≤3.2 µm	≤16 µm

Note: It is recommended to have 50% to 90% of the working surface material contact area value.

INSTALLATION
Easily assembled into one-piece piston because the back-up rings and guide rings are produced in split forms. It is very important that the assembly tools must be of soft material and have no sharp edges. Before installation the sealing element must be oiled with system oil.

NOTES
For special applications that require high temperatures, piston seal is manufactured in FKM and PTFE material.

K518 COMPACT PISTON SEAL

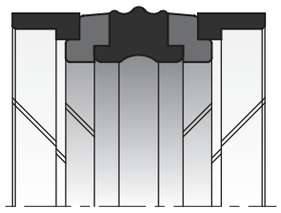

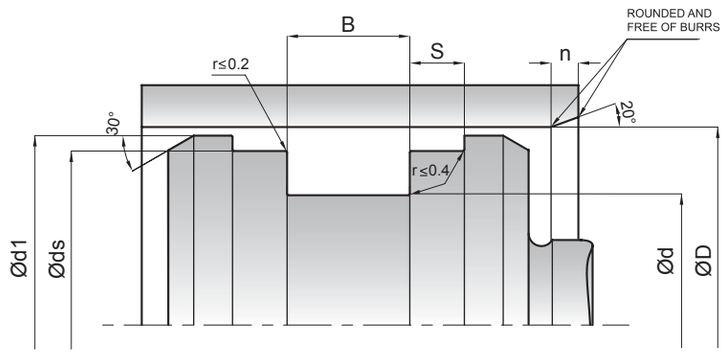

KASTAŞ NO	D(H8)	d(h9)	B(+0.2)	ds(h8)	d1(±0.1)	s(+0.2)	n
K518 025-016	25	16	13.5	22	24	2.1	4
K518 032-022	32	22	16.4	28.5	30.5	6.35	4
K518 035-025	35	25	16.4	31.4	33.5	6.35	4
K518 040-030	40	30	16.4	35.4	38.5	6.35	4
K518 040-030/1	40	30	12.5	37	39	4	4
K518 040-032/1	40	32	10	37	39	4	4
K518 040-032	40	32	15.5	36	39.4	3.2	4
K518 045-029	45	29	18.4	40.4	43.5	6.35	5
K518 045-035	45	35	16.4	40.4	43.5	6.35	4
K518 050-034/1	50	34	18.4	45.41	48.66	6.35	5
K518 050-034	50	34	20.5	46	49	3.1	5
K518 050-038	50	38	20.5	46	49.4	4.2	4
K518 055-039/1	55	39	18.4	50.37	53.65	6.35	5
K518 055-039	55	39	20.5	51	54	3.1	5
K518 055-045	55	45	12.5	52	54	4	4
K518 060-044/1	60	44	18.4	55.39	58.65	6.35	5
K518 060-044	60	44	20.2	56	59	3.1	5
K518 060-048	60	48	20.5	56	59.4	4.2	4
K518 063-047	63	47	20.5	59	62	3.1	5
K518 063-047/1	63	47	18.4	58.39	61.63	6.35	5
K518 063-051	63	51	20.5	59	62.4	4.2	4
K518 063-053	63	53	12.5	60	62	4	4
K518 065-049	65	49	20.5	61	64	3.1	5
K518 065-050	65	50	18.4	60.41	63.64	6.35	5
K518 070-050	70	50	22.4	64.18	68.34	6.35	6
K518 070-054	70	54	20.5	66	69	3.1	5
K518 070-058	70	58	20.5	66	69.4	4.2	5
K518 075-055	75	55	22.4	69.2	73.3	6.35	6
K518 075-059	75	59	20.5	71	74	3.1	5
K518 080-060	80	60	22.4	74.15	78.3	6.35	6
K518 080-062	80	62	22.5	76	79	3.6	5
K518 080-066	80	66	22.4	76	79.4	5.2	5
K518 085-065	85	65	22.4	79.15	83.3	6.35	6
K518 090-070	90	70	22.4	84.15	88.3	6.35	6
K518 090-072/1	90	72	22.5	86	89	3.6	6

Please contact our customer service for the dimensions out of our stock list.

K518 COMPACT PISTON SEAL

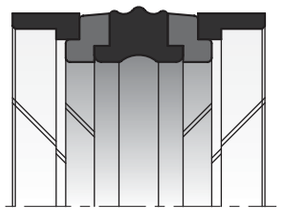

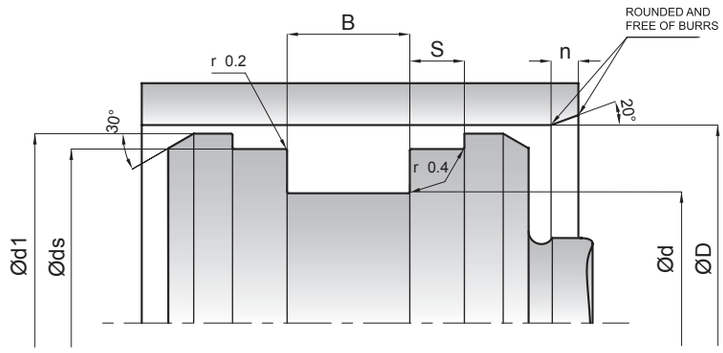

KASTAŞ NO	D(H8)	d(h9)	B(+0.2)	ds(h8)	d1(±0.1)	s(+0.2)	n
K518 090-076	90	76	22.4	86	89.4	5.2	
K518 095-075	95	75	22.4	89.15	93.31	6.35	
K518 105-080/1	105	80	22.4	98.1	103	6.35	
K518 100-075	100	75	22.4	93.13	98	6.35	
K518 100-086	100	86	22.4	96	99.4	5.2	
K518 110-085	110	85	22.4	103.1	108	6.35	
K518 110-096	110	96	22.4	106	109.4	5.2	
K518 115-090	115	90	22.4	108.1	113.02	6.35	
K518 115-101	115	101	22.4	111	114.4	5.2	
K518 120-095	120	95	22.4	113.1	118	6.35	
K518 120-106	120	106	22.4	116	119.4	5.2	
K518 125-100	125	100	25.4	118.1	123	6.35	
K518 125-108	125	108	26.5	121	124.4	7.2	
K518 130-105	130	105	25.4	123.1	128	6.35	
K518 130-105/1	130	105	25.4	123.1	128	9.52	
K518 130-105/2	130	105	25.4	122.6	127.5	9.52	
K518 135-110	135	110	25.4	127.6	132.5	9.52	
K518 140-115	140	115	25.4	132.6	137.5	6.35	
K518 140-115/2	140	115	25.4	133	138	6.35	
K518 140-115/1	140	115	25.4	132.6	137.5	9.52	
K518 140-118	140	118	26.5	136	139	5.1	
K518 140-123	140	123	26.5	136	139.4	7.2	
K518 150-125	150	125	25.4	142.6	147.5	9.5	
K518 150-128	150	128	26.5	146	149	5.1	
K518 160-130	160	130	25.4	153	157.5	6.35	
K518 160-135	160	135	25.4	152.6	157.5	9.52	
K518 160-143	160	143	26.5	156	159.4	7.2	
K518 165-140	165	140	25.4	157.6	162.5	9.52	
K518 165-143	165	143	26.5	161	163.5	5.25	
K518 170-145	170	145	25.4	161.72	167.1	12.7	
K518 170-148	170	148	26.5	166	169	5.1	
K518 180-150	180	150	35.4	172.94	177.87	6.35	
K518 180-155	180	155	25.4	171.72	177.1	12.7	
K518 180-158	180	158	26.5	176	179	5.1	
K518 180-163	180	163	26.5	176	179.4	7.2	

KASTAŞ NO	D(H8)	d(h9)	B(+0.2)	ds(h8)	d1(±0.1)	s(+0.2)	n
K518 200-180	200	180	31.5	196	199.4	9.2	6
K518 210-185	210	185	25.4	201.62	207	12.7	6
K518 220-200	220	200	31.5	216	219.4	9.2	6
K518 250-230	250	230	31.5	246	249.4	9.2	6
K518 190-165	190	165	25.4	181.72	187.05	12.7	6
K518 200-170	200	170	35.4	193	198	6.35	7
K518 200-175	200	175	31.5	196	199	6.6	6
K518 200-175/1	200	175	25.4	191.62	197	12.7	6
K518 220-195	220	195	25.4	211.62	217	12.7	6
K518 230-205	230	205	25.4	221.62	227	12.7	6
K518 240-215	240	215	25.4	231.62	237	12.7	6
K518 250-225	250	225	25.4	241.62	247	12.7	6
K518 260-235	260	235	35.4	252.9	257	12.7	6
K518 044.45-028.57	44.45	28.57	19.05	39.85	43.12	6.35	5
K518 050.8-34.92	50.8	34.92	19.05	46.22	49.48	6.35	5
K518 060.32-44.45	60.32	44.45	19.05	55.72	58.98	6.35	5
K518 066.67-50.80	66.67	50.8	19.05	62.09	65.27	6.35	5

Please contact our customer service for the dimensions out of our stock list.

K704 ROD SEAL

K704 is two piece single acting rod seal which consists of one special mixture PTFE profile ring and a NBR elastomer ring as energizing element.

PRODUCT ADVANTAGES
• Low friction, free of stick-slip
• Long service life
• High sliding speed
• Wide range of temperature and chemicals depending on the energizing material
• Minimum static and dynamic friction coefficient for minimum energy loss
• Simple groove design and low axial housing heights

APPLICATION
Steel industry, injection moulding machines, presses, large diameter cylinders

MATERIAL		CODE
PTFE		PT6003
NBR	80 SHORE A	NB8001

OPERATION CONDITIONS	
MEDIA	Mineral oils (DIN 51524)
TEMPERATURE	-30°C +105°C
PRESSURE	≤400 Bar
SPEED	≤5 m/sn

Note: The above data are maximum values and cannot be used at the same time.

SURFACE ROUGHNESS		Ra	Rmax
Sliding Surface	Ød	≤0.2 µm	≤2.0 µm
Groove Base	ØD	≤1.6 µm	≤6.3 µm
Groove Flanks	B	≤3.2 µm	≤16 µm

Note: It is recommended to have 50% to 90% of the working surface material contact area value.

INSTALLATION
We recommend using assemly tool (See section; Hydraulic Sealing Elements General Installation Information). It is very important that the assembly tools must be of soft material and have no sharp edges. Before installation the sealing element must be oiled with system oil.

NOTES
For HFA HFB HFC used applications, special filled PTFE materials are recommended. Resistance in low temperature and high temperature applications can be improved by alternate elastomer compounds.

PERMISSIBLE SEALING GAP

B (mm)	Smax (mm)		
	150 Bar	250 Bar	400 Bar
10	0.60	0.50	0.40
12,5	0.65	0.55	0.45
15	0.70	0.60	0.50
17,5	0.75	0.65	0.55
20	0.80	0.70	0.55

K704 ROD SEAL

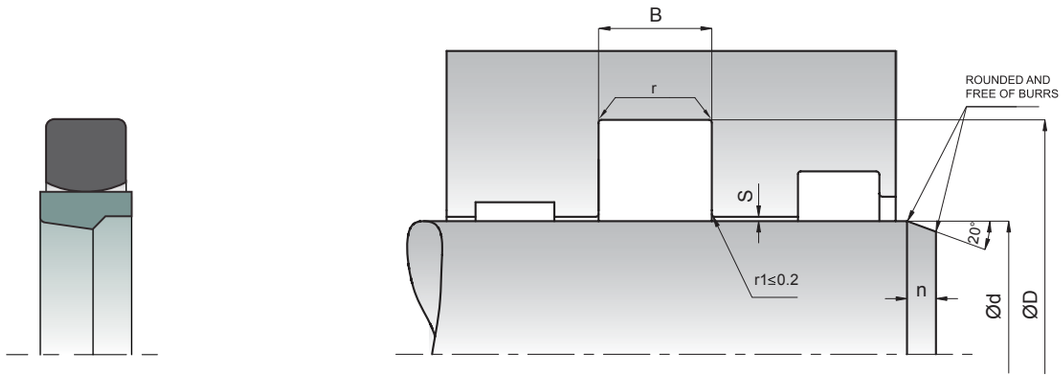

KASTAŞ NO	d(f8)	D(H8)	B(+0.2/-0.0)	r
K704-140	140	160	10	0.4
K704-155	155	175	10	0.4
K704-200	200	220	10	0.4
K704-240	240	265	12.5	0.4
K704-280	280	305	12.5	0.4
K704-290	290	315	12.5	0.4
K704-300	300	325	12.5	0.4
K704-310	310	340	15	0.8
K704-320	320	350	15	0.8
K704-330	330	360	15	0.8
K704-340	340	370	15	0.8
K704-380	380	410	15	0.8
K704-415	415	445	15	0.8
K704-475	475	505	15	0.8
K704-560	560	584	17.5	1.2
K704-570	570	605	17.5	1.2

Please contact our customer service for the dimensions out of our stock list.

K705 WIPER

K705 is a three piece single acting wiper which consists of one special mixture PTFE profile ring and two o-rings as energizers. K705 ensures that foreign particles are not introduced into the hydraulic systems, avoiding wear and damage to all the internal components including seals.

PRODUCT ADVANTAGES
- Low friction
- Free of stick-slip
- High sliding speed
- Wide range of temperature and chemicals depending on the elastomer material

APPLICATION
Mobile hydraulics, aluminium injection machines and industrial machinery, control and regulation equipment

MATERIAL		CODE
PTFE		PT6003
NBR	70 SHORE A	NB7001

OPERATING CONDITIONS	
MEDIA	Mineral oils (DIN 51524)
TEMPERATURE	-30°C +105°C
SPEED	≤5.0 m/sn

Note: The above data are maximum values and cannot be used at the same time. For HFA HFB HFC used applications, special filled PTFE materials are recommended. Resistance in low temperature and high temperature applications can be improved by alternate elastomer compounds.

SURFACE ROUGHNESS		Ra	Rmax
Sliding Surface	Ød	≤0.2 µm	≤2.0 µm
Groove Base	ØD	≤1.6 µm	≤6.3 µm
Groove Flanks	B	≤3.2 µm	≤16 µm

Note: It is recommended to have 50% to 90% of the working surface material contact area value.

INSTALLATION
We recommend using special assembly tool (See section; Hydraulic Sealing Elements General Installation Information). It is very important that the assembly tools must be of soft material and have no sharp edges. Before installation the sealing element must be oiled with system oil.

NOTES
K705 wipers have to be used with K35 or K704 rod seals to prevent hydrodynamic pressure build up. If that is not possible some precautions have to be taken to prevent hydrodynamic pressure between wiper and seal (see section: Hydraulic Sealing Elements- Sample Designs). At high temperature working conditions FKM energizing O-ring and special mixture PTFE ring are able to be manufactured according to customer's request.

K705 WIPER

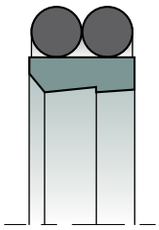

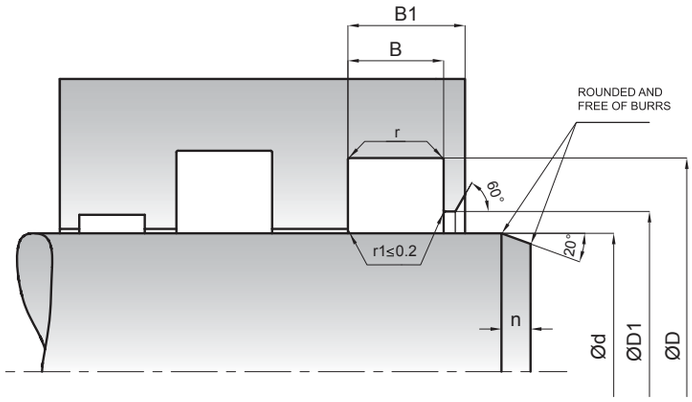

KASTAŞ NO	d(f8)	D(H9)	D1(-0/+0.2)	B(-0/+0.2)	B1	r	n
K705-028	28	35.6	29	4.2	8.2	0.4	3
K705-035	35	42.6	36	4.2	8.2	0.4	3
K705-036	36	43.6	37	4.2	8.2	0.4	3
K705-040	40	48.8	41.5	6.3	10.3	1.2	3
K705-045	45	53.8	46.5	6.3	10.3	1.2	3
K705-050	50	58.8	51.5	6.3	10.3	1.2	3
K705-055	55	63.8	56.5	6.3	10.3	1.2	4
K705-056	56	64.8	57.5	6.3	10.3	1.2	4
K705-060	60	68.8	61.5	6.3	10.3	1.2	4
K705-063	63	71.8	64.5	6.3	10.3	1.2	4
K705-065	65	73.8	66.5	6.3	10.3	1.2	4
K705-070	70	82.2	72	8.1	12.1	2	4
K705-075	75	87.2	77	8.1	12.1	2	4
K705-080	80	92.2	82	8.1	12.1	2	4
K705-085	85	97.2	87	8.1	12.1	2	4
K705-090	90	102.2	92	8.1	12.1	2	4
K705-100	100	112.2	102	8.1	12.1	2	4
K705-105	105	117.2	107	8.1	12.1	2	4
K705-110	110	122.2	112	8.1	12.1	2	4
K705-115	115	127.2	117	8.1	12.1	2	4
K705-120	120	132.1	122	8.1	12.1	2	4
K705-125	125	137.2	127	8.1	12.1	2	6
K705-130	130	142.2	132	8.1	12.1	2	6
K705-135	135	147.2	137	8.1	12.1	2	6
K705-140	140	156	142	11.5	15.5	2	6
K705-150	150	166	152	11.5	15.5	2	6
K705-155	155	171	157	11.5	15.5	2	6
K705-160	160	176	162	11.5	15.5	2	6
K705-170	170	186	172	11.5	15.5	2	6
K705-180	180	196	182	11.5	15.5	2	6
K705-190	190	206	192	11.5	15.5	2	6
K705-200	200	216	202	11.5	15.5	2	6
K705-210	210	226	212	11.5	15.5	2	6
K705-220	220	236	222	11.5	15.5	2	6
K705-230	230	246	232	11.5	15.5	2	8

Please contact our customer service for the dimensions out of our stock list.

K706 WIPER

K706 is a two piece acting wiper which consists of one special designed thermoplastic ring and an o-ring as energizing element. K706 ensures that foreign particles do not penetrate into the hydraulic systems, avoiding wear and damage to all internal components including seals.

PRODUCT ADVANTAGES
- Long service life
- High sliding speed
- Resistance to chemicals and temperature changes depending on chosen o-ring material
- Low friction coefficients
- Free of stick-slip

APPLICATION
Industrial equipment, mobile hydraulics.

MATERIAL		CODE
NBR	70 SHORE A	NB7001
PTFE		PT6003

OPERATING CONDITIONS			
MEDIA	Mineral oils (DIN 51524)	HFA and HFB	HFC
TEMPERATURE	-30°C +105°C	+5°C +60°C	-20°C +50°C
SPEED	≤5.0 m/sn	≤5.0 m/sn	≤5.0 m/sn

Note: The above data are maximum values and cannot be used at the same time.

SURFACE ROUGHNESS		Ra	Rmax
Slinding Surface	Ød	≤0.4 µm	≤3.2 µm
Groove Base	ØD	≤1.6 µm	≤6.3 µm
Groove Flanks	B	≤3.2 µm	≤16 µm

Note: It is recommended to have 50% to 90% of the working surface material contact area value.

INSTALLATION
Easy installation into closed grooves, we recommend using special assembly tool (see section; Hydraulic Sealing Elements General Installation Information). It is very important that the assembly tools must be of soft material and have no sharp edges.

NOTES
K706 wiper should be used in combination of suitable rod seals (able to evacuate back pressure, ex. K35) to avoid hydrodynamic pressure or pressure relieving bore between seal and wiper should be constructed to prevent build up pressures.
(See section; Hydraulic Sealing Elements - Sample Designs)
Energizer ring of K706 wiper can be produced on request in FKM for special applications that require high temperatures.

K706 WIPER

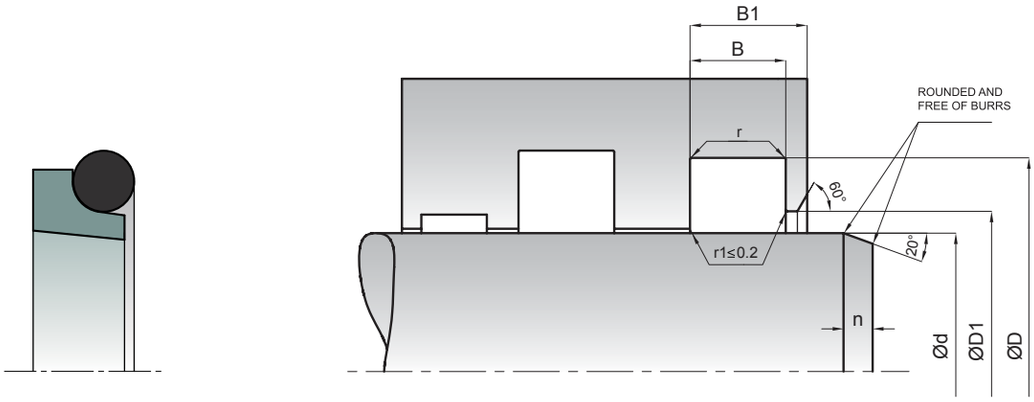

KASTAŞ NO	d(f8)	D(H9)	D1(H11)	B(-0/+0.2)	B1	r	ORING
K706-050	50	56.8	51.5	5	8	0.8	52.07x2.62
K706-060	60	66.8	61.5	5	8	0.8	61.6x2.62
K706-070	70	78.8	72	6	9	1	72.62x3.53
K706-080	80	88.8	82	6	9	1	82.14x3.53
K706-085	85	93.8	87	6	9	1	85.35x3.53
K706-090	90	98.8	92	6	9	1	91.67x3.53
K706-100	100	108.8	102	6	9	1	101.19x3.53
K706-120	120	128.8	122	6	9	1	123.42x3.53
K706-130	130	138.8	132	6	9	1	132.94x3.53
K706-160	160	168.8	162	6	9	1	158.34x3.53
K706-240	240	248.8	242	6	9	1	240.89x3.53

Please contact our customer service for the dimensions out of our stock list.

K709 is a two piece double acting rod seal which consists of one special mixture PTFE profile ring and an o-ring as an energizing element.

PRODUCT ADVANTAGES
- Free of stick-slip
- Long service life
- High sliding speed
- Able to operate with wide range of chemicals and wide range of temperature depending on the o-ring material
- Low friction coefficient
- Superior static and dynamic sealing

APPLICATION
Industrial machines, injection moulding machines, mobile hydraulics, automotive industry, hydraulic breakers and servo cylinders.

MATERIAL		CODE
NBR	70 SHORE A	NB7001
PTFE		PT6003

OPERATING CONDITIONS			
MEDIA	Mineral oils (DIN 51524)	HFA and HFB	HFC
TEMPERATURE	-30°C +105°C	+5°C +60°C	-20°C +50°C
PRESSURE	≤400 Bar	≤400 Bar	≤400 Bar
SPEED	≤5.0 m/sn	≤5.0 m/sn	≤5.0 m/sn

Note: The above data are maximum values and cannot be used at the same time.

SURFACE ROUGHNESS		Ra	Rmax
Slinding Surface	Ød	≤0.2 µm	≤2.0 µm
Groove Base	ØD	≤1.6 µm	≤6.3 µm
Groove Flanks	B	≤3.2 µm	≤15 µm

Note: It is recommended to have 50% to 90% of the working surface material contact area value.

INSTALLATION
We recommend using special assembly tool (see section; Hydraulic Sealing Element General Installation Information). It is very important that the assembly tools must be of soft material and have no sharp edges. Before the installation the sealing element must be oiled with system oil.

NOTES
K709 type of rod seal can also be used with double wiper lips. For special applications that require high temperatures or resistance to chemicals, rod seal is being manufactured with special mixture of PTFE and FKM material. For heavy duty applications and high pressures the tolerances should change to H8/f8 and please contact our customer service to choose the suitable sealing element. The permissable sealing gap values of K709 rod seal is given in the table below.

PERMISSIBLE SEALING GAP			
B (mm)		**Smax (mm)**	
	150 Bar	250 Bar	400 Bar
2.2	0.25	0.15	0.10
3.2	0.35	0.20	0.10
4.2	0.35	0.20	0.15
6.3	0.45	0.25	0.15
8.1	0.55	0.30	0.20

Note: The largest sealing gap value occuring on the non-pressurized side of the seal does have a vital importance for the function of the seal and in this respect it is quite important to use the S value lower than the above indicated numbers.

K709 ROD SEAL

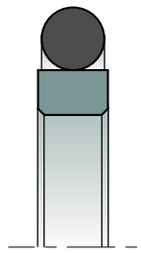

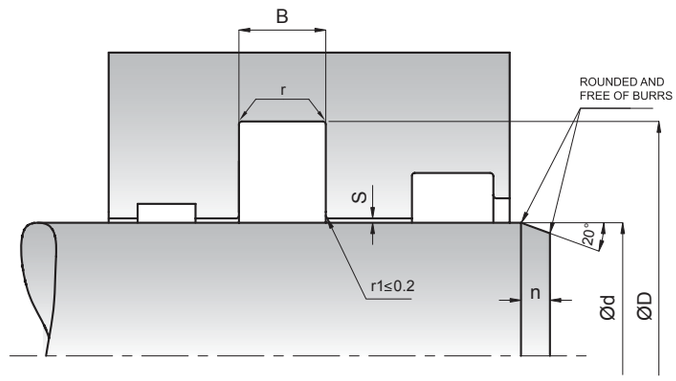

KASTAŞ NO	d(f8)	D(H9)	B(-0/+0.2)	r	n	oring
K709-045	45	60.1	6.3	1.2	5	50.16x5.33
K709-050	50	65.1	6.3	1.2	5	53.34x5.33
K709-050/1	50	60.7	4.2	0.8	3.4	53.57x3.53
K709-063	63	78.1	6.3	1.2	5	66.04x5.33
K709-065	65	80.1	6.3	1.2	5	69.22x5.33
K709-070	70	85.1	6.3	1.2	5	75.57x5.33
K709-080	80	91	4.2	0.8	3.4	82.14x3.53
K709-080/1	80	95.1	6.3	1.2	5	85.09x5.33
K709-90	90	101	4.2	0.8	3.4	91.67x3.53
K709-090/1	90	105.1	6.3	1.2	5	94.62x5.33
K709-100	100	115.1	6.3	1.2	5	107.32x5.33
K709-110	110	125.1	6.3	1.2	5	116.84x5.33
K709-125	125	140.1	6.3	1.2	5	129.54x5.33
K709-140	140	155.1	6.3	1.2	5	145.42x5.33
K709-160	160	175.1	6.3	1.2	5	164.47x5.33
K709-170	170	181	4.2	0.8	3.4	171.05x3.53
K709-180	180	200.5	8.1	1.6	6.5	189.87x6.99
K709-200	200	220.5	8.1	1.6	6.5	208.9x6.99
K709-350	350	370.5	8.1	1.6	6.5	354.9x6.99
K709-350/1	350	374	8.1	1.6	6.5	367.67x6.99

Please contact our customer service for the dimensions out of our stock list.

K715 PNEUMATIC ROD SEAL

K715 is a double acting pneumatic rod seal which consists of one special mixture PTFE profile and an o-ring as an energizing element.

PRODUCT ADVANTAGES
- Low friction
- High sliding speed and oilles usability
- Long service life
- Simple groove design

APPLICATION
Pneumatic cylinders.

MATERIAL		CODE
PTFE		PT6005
NBR	70 SHORE A	NB7001

OPERATING CONDITIONS	
MEDIA	Prepared, dried and de-oiled or oilless air
TEMPERATURE	-30°C +80°C
PRESSURE	≤40 Bar
SPEED	≤5.0 m/sn

Note: The above data are maximum values and cannot be used at the same time.

SURFACE ROUGHNESS		Rmax
Slinding Surface	Ød	≤2 µm
Groove Base	ØD	≤6,3 µm
Groove Flanks	B	≤15 µm

INSTALLATION
It is very important that the assembly tools must be of soft material and have no sharp edges. K715 can be installed without using assembly tools due to elasticity of slim PTFE ring.

NOTES
Smax = ≤ 0,2.

K715 PNEUMATIC ROD SEAL

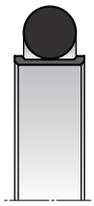

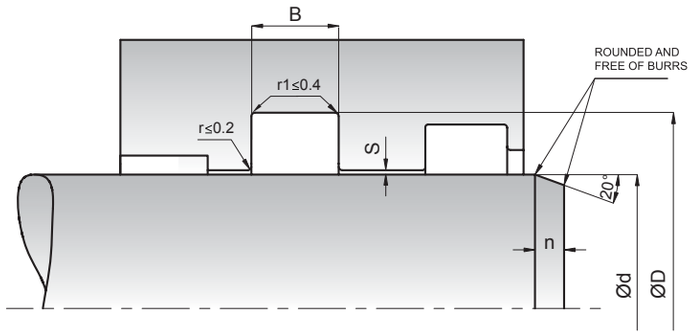

KASTAŞ NO	D(H8)	d(f9)	B(-0/+0.2)	r1	n	ORING
K715 - 050	59.4	50	7.1	0.8	5.7	50.16x5.33
K715 - 056	65.4	56	7.1	0.8	5.7	56.52x5.33
K715 - 063	72.4	63	7.1	0.8	5.7	62.87x5.33
K715 - 070	79.4	70	7.1	0.8	5.7	72.40x5.33
K715 - 080	89.4	80	7.1	0.8	5.7	81.92x5.33
K715 - 090	99.4	90	7.1	0.8	5.7	91.44x5.33
K715 - 100	109.4	100	7.1	0.8	5.7	100.97x5.33
K715 - 110	119.4	110	7.1	0.8	5.7	110.49x5.33
K715 - 125	137.2	125	9.5	0.8	7.6	126.37x6.99
K715 - 140	152.2	140	9.5	0.8	7.6	142.24x6.99
K715 - 160	172.2	160	9.5	0.8	7.6	164.47x6.99

Please contact our customer service for the dimensions out of our stock list.

K716 WIPER

K716 is three piece single acting wiper which consists of one special designed PTFE profile ring and two o-ring as energizing element. K716 ensures that foreign particles do not penetrate into the hydraulic systems, avoiding wear and demage to all the internal components incluing seals.

PRODUCT ADVANTAGES
- Long service life
- High sliding speed
- Low friction
- Free of stick-slip
- Wide range of dimensions

APPLICATION
Metallurgical industry, heavy industry.

MATERIAL		CODE
NBR	70 SHORE A	NB7001
PTFE		PT6003

OPERATING CONDITIONS			
MEDIA	Mineral oils (DIN 51524)	HFA and HFB	HFC
TEMPERATURE	-30°C +105°C	+5°C +60°C	-20°C +50°C
SPEED	≤5.0 m/sn	≤5.0 m/sn	≤5.0 m/sn

Note: The above data are maximum values and cannot be used at the same time.

SURFACE ROUGHNESS		Ra	Rmax
Slinding Surface	Ød	≤0.4 µm	≤3.2 µm
Groove Base	ØD	≤1.6 µm	≤6.3 µm
Groove Flanks	B	≤3.2 µm	≤16 µm

Note: It is recommended to have 50% to 90% of the working surface material contact area value.

INSTALLATION
We are recommend using special assembly tool (See section; Hydraulic Sealing Elements General Installation Information). It is very important that the assembly tools must be of soft material and have no sharp edges. Before installation the sealing element must be oiled with system oil.

NOTES
When K716 wiper is being used with double lip sealing element, we recommend a pressure relieving bore between the seal and wiper. For special applications that require high temperatures or resistance to chemicals, piston seal can be manufactured with special mixture PTFE and FKM.

K716 WIPER

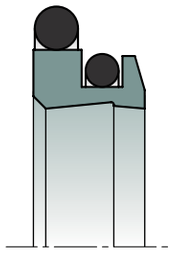

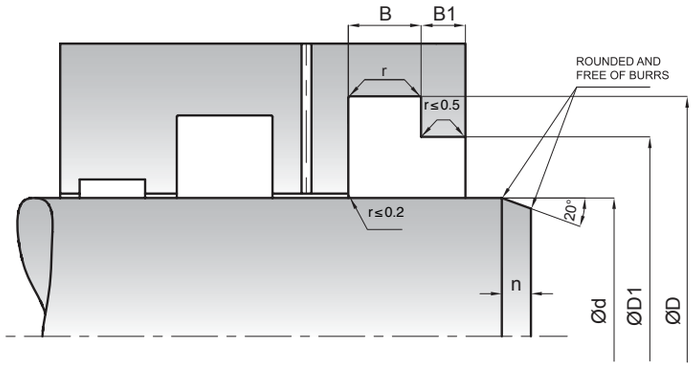

KASTAŞ NO	d(f8)	D1(H9)	D(H9)	B(+0.2/-0)	B1(+0.2/-0)	r	n
K716-100	100	110.7	122.2	6.3	4.2	0.8	6
K716-110	110	120.7	132.2	6.3	4.2	0.8	6
K716-120	120	130.7	142.2	6.3	4.2	0.8	6
K716-130	130	140.7	152.2	6.3	4.2	0.8	6
K716-140	140	150.7	162.2	6.3	4.2	0.8	6
K716-150	150	160.7	172.2	6.3	4.2	0.8	6
K716-160	160	170.7	182.2	6.3	4.2	0.8	6
K716-170	170	180.7	192.2	6.3	4.2	0.8	6
K716-180	180	190.7	202.2	6.3	4.2	0.8	6
K716-190	190	200.7	212.2	6.3	4.2	0.8	6
K716-200	200	210.7	222.2	6.3	4.2	0.8	6

Please contact our customer service for the dimensions out of our stock list.

K755 PISTON SEAL

K755 is a two piecedouble acting piston seal which consists of one energizing elastomer ring and special mixture thermoplastic ring.

PRODUCT ADVANTAGES
• Low firction, free stick-slip
• Excellent performance in large diameter cylinders and heavy duty applications
• Long service life
• High sliding speed
• Wide range of temperature and chemicals depending on the o-ring material
• Minimum static and dynamic friction coefficient for a minimum energy loss
• Simple groove design and low axial housing heights
• No twisting in the housing

APPLICATION
Steel industry, injection moulding machines, presses, large diameter cylinders, steel industry

MATERIAL		CODE
PTFE		PT6003
NBR	80 SHORE A	NB8001

OPERATING CONDITIONS	
MEDIA	Mineral oils (DIN 51524)
TEMPERATURE	-30°C +105°C
PRESSURE	≤400 Bar
SPEED	≤5.0 m/sn

Note: The above data are maximum values and cannot be used at the same time. For HFA HFB HFC used applications, special filled PTFE materials are recommended. Resistance in low temperature and high temperature applications can be improved by alternate elastomer compounds.

SURFACE ROUGHNESS		Ra	Rmax
Sliding Surface	Ød	≤0.2 µm	≤2.0 µm
Groove Base	ØD	≤1.6 µm	≤6.3 µm
Groove Flanks	B	≤3.2 µm	≤16 µm

Note: It is recommended to have 50% to 90% of the working surface material contact area value.

INSTALLATION
We recommend using special assembly tool (See section; Hydraulic Sealing Elements General Installation Information). It is very important that the assembly tools must be of soft material and have no sharp edges. Before installation the sealing element must be oiled with system oil.

NOTES
For special applications that require high temperatures, rod seal is manufactured in FKM and PTFE material.

PERMISSIBLE SEALING GAP

B (mm)	Smax (mm)		
	150 Bar	250 Bar	400 Bar
10	0.60	0.50	0.40
12.5	0.65	0.55	0.45
15	0.70	0.60	0.50
17.5	0.75	0.65	0.55
20	0.80	0.70	0.60

Note: All the above mentioned "S" values are maximum and it's vital to use lower values for system security.

K755 PISTON SEAL

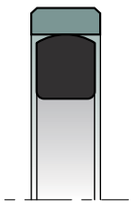

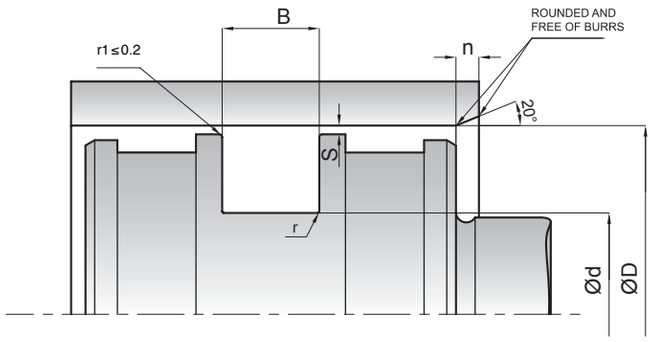

KASTAŞ NO	D(H8)	d(h8)	B(+0.2/-0.0)	r	n
K755 200-175	200	175	12.5	0.4	10
K755 220-195	220	195	12.5	0.4	10
K755 225-200	225	200	12.5	0.4	10
K755 240-215	240	215	12.5	0.4	12
K755 250-220	250	220	15	0.8	12
K755 260-230	260	230	15	0.8	12
K755 320-290	320	290	15	0.8	12
K755 325-295	325	295	15	0.8	12
K755 327.5-297.5	327.5	297.5	15	0.8	12
K755 340-310	340	310	15	0.8	12
K755 350-320	350	320	14	0.8	12
K755 355-325	355	325	15	0.8	12
K755 360-330	360	330	15	0.8	12
K755 430-400	430	400	15	0.8	12
K755 460-430	460	430	14	1.2	12
K755 490-460	490	460	15	1.2	12
K755 540-505	540	505	17.5	1.2	12
K755 590-555	590	555	17.5	1.2	12

Please contact our customer service for the dimensions out of our stock list.

K761 PNEUMATIC PISTON SEAL

K761 is two piece double acting pneumatic piston seal which consists of Carbon PTFE and NBR O-Ring.

PRODUCT ADVANTAGES
- Low friction
- High sliding speed and oilless working ability
- Long service life
- Simple groove design

APPLICATION
Pneumatic cylinders.

MATERIAL		CODE
PTFE		PT6005
NBR	70 SHORE A	NB7001

OPERATING CONDITIONS	
MEDIA	Prepared, dried and de-oiled or oilless air
TEMPERATURE	-30°C +80°C
PRESSURE	≤40 Bar
SPEED	≤5.0 m/sn

Note: The above data are maximum values and cannot be used at the same time.

SURFACE ROUGHNESS		Rmax
Slinding Surface	Ød	≤2 µm
Groove Base	ØD	≤6.3 µm
Groove Flanks	B	≤15 µm

INSTALLATION
It is very important that the assembly tools must be of soft material and have no sharp edges. Using assembly tools for installation is suggested.

NOTLAR
Smax = ≤ 0,2.

K761 PNEUMATIC PISTON SEAL

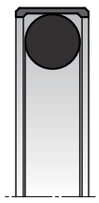

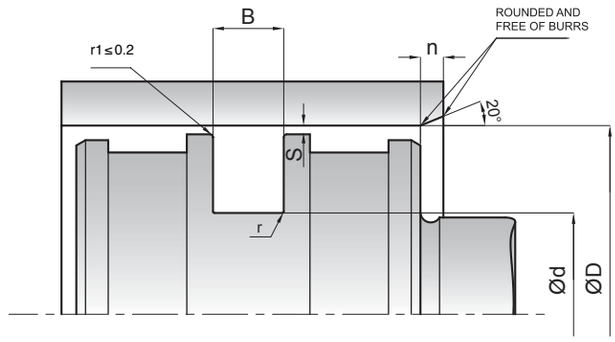

KASTAŞ NO	D(H8)	d(h9)	B(-0/+0,2)	n	r	oring
K761-030	30	23,8	4,8	3,85	0,6	23,4x3,53
K761-040	40	33,8	4,8	3,85	0,6	32,92x3,53
K761-050	50	40,6	7,1	5,7	0,8	40,65x5,33
K761-060	60	50,6	7,1	5,7	0,8	50,17x5,33
K761-070	70	60,6	7,1	5,7	0,8	59,69x5,33
K761-080	80	70,6	7,1	5,7	0,8	69,22x5,33
K761-090	90	80,6	7,1	5,7	0,8	78,74x5,33
K761-100	100	90,6	7,1	5,7	0,8	88,27x5,33
K761-110	110	100,6	7,1	5,7	0,8	97,79x5,33
K761-120	120	110,6	7,1	5,7	0,8	107,32x5,33
K761-140	140	124,5	9,5	7,6	0,8	126,37x6,99
K761-150	150	137,8	9,5	7,6	0,8	135,89x6,99
K761-160	160	147,8	9,5	7,6	0,8	145,42x6,99

Please contact our customer service for the dimensions out of our stock list.

K762 PISTON SEAL

K762 is a two piece double acting piston seal which consists of one special mixture PTFE profile ring and a square ring as energizing element.

PRODUCT ADVANTAGES
- Free of stick-slip
- Small one piece piston
- Long service life
- High sliding speed
- Able to operate with wide range of temperature and chemicals depending on the square ring material
- Low friction coefficient
- Superior static and dynamic sealing
- Square ring prevents twisting in the housing

APPLICATION
Injection, moulding machines, excavators, forklifts, agricultural machinery, loading platforms, presses, hydraulic and pneumatic valve systems.

MATERIAL		CODE
NBR	70 SHORE A	NB7001
PTFE		PT6003

OPERATING CONDITIONS			
MEDIA	Mineral oils (DIN 51524)	HFA and HFB	HFC
TEMPERATURE	-30°C +105°C	+5°C +60°C	-20°C +50°C
PRESSURE	≤400 Bar	≤400 Bar	≤400 Bar
SPEED	≤5.0 m/sn	≤5.0 m/sn	≤5.0 m/sn

Note: The above data are maximum values and cannot be used at the same time.

SURFACE ROUGHNESS		Ra	Rmax
Slinding Surface	Ød	≤0.2 µm	≤2.0 µm
Groove Base	ØD	≤1.6 µm	≤6.3 µm
Groove Flanks	B	≤3.2 µm	≤15 µm

Note: It is recommended to have 50% to 90% of the working surface material contact area value.

INSTALLATION
It is very important that the assembly tools must be of soft material and have no sharp adges. We recommend using special assembly tool (see section; Hydraulic Sealing Elements General Installation) and to have open groove design for dimensions that are smaller than Ø 40 mm. Before installation the sealing elements must be oiled with system oil.

NOTES
It is recommended to use with minimum two piston guide rings in long stroke cylinders, minimum one ring in short stroke and under low radial loads. For special applications that require high temperatures or resistance to chemicals, piston seal can be manufactured with special mixture PTFE and FKM material.
The permissable gap valves of K762 piston seal is given in the table below.

PERMISSIBLE SEALING			
Pressure (Bar)		**Smax (mm)**	
	150 Bar	250 Bar	400 Bar
2.2	0.3	0.20	0.15
3.2	0.4	0.25	0.15
4.2	0.4	0.25	0.20
6.3	0.5	0.30	0.20
8.1	0.6	0.35	0.25
9.5	0.7	0.50	0.30

Note: The largest sealing gap value occuring on the non-pressurized side of the seal does have a vital importance for the function of the seal and in this respect it is quite important to use the S value lower than the above indicated numbers.

K762 PISTON SEAL

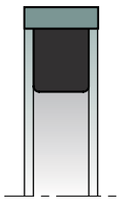

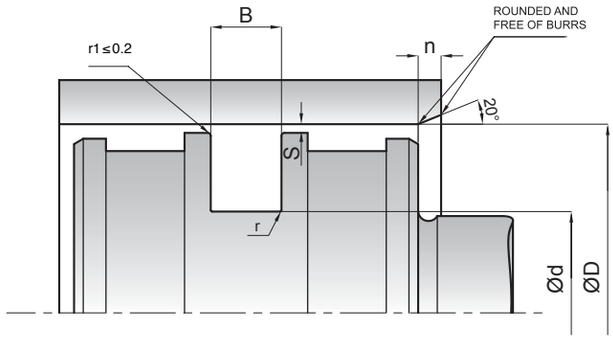

KASTAŞ NO	D (H8)	d (h9)	B(-0/+0.2)	r	n
K762 075-060	75	60	7.5	0.4	5
K762 080-065	80	65	7.5	0.4	5
K762 100-085	100	85	7.5	0.4	5
K762 290-266	290	266	12	0.4	7.5

Please contact our customer service for the dimensions out of our stock list.

KASTAS SEALING TECHNOLOGIES A.S.
Atatürk Organize Sanayi Bölgesi, 10001 Sokak, No. 19 35621 Çiğli-İZMİR / TURKEY • Tel. +90 232 376 88 26 • Fax. +90 232 376 87
www.kastas.com • info@kastas.com.tr

KASTAS SEALING TECHNOLOGIES EUROPE GmbH
Robert-Bosh-Str 11-13, 25451 Quickborn/GERMANY
TEl.+49 40 181 2060 50 • Fax. +49 40 181 2026 55
www.kastas.com • europe@kastas.com.tr

KASTAŞ

www.kastas.com